NO FUSS Dead-On Dadoes

Table Saw Tune-Up: Precision Performance — Guaranteed!

Woodsmith®

Vol. 23 / No. 138

Formal Hall Table

Elegant Details — Easier Than You Think

Also Inside:

- **Bracket Wall Shelf:** 2 Classic Styles — Endless Possibilities
- **Roll-Around Storage Cart:** With An All-New Drawer Design

www.woodsmith.com

Woodsmith

No. 138 December, 2001

Publisher Donald B. Peschke
Editor Terry J. Strohman
Senior Editor Jon Garbison
Assistant Editor Brian McCallum
Contrib. Editor Craig Ruegsegger
Art Director Todd Lambirth
Senior Illustrators David Kreyling, Dirk Ver Steeg, Harlan V. Clark
Graphic Intern Jonathan Eike

CREATIVE RESOURCES
Creative Director: Ted Kralicek • *Project Developer:* Ken Munkel • *Project Designers:* Chris Fitch, Craig Iseke • *Shop Craftsmen:* Steve Curtis, Steve Johnson • *Sr. Photographer:* Crayola England

SPECIAL PUBLICATIONS
Corp VP: Douglas L. Hicks • *Art Director:* Douglas A. Flint • *Senior Graphic Designer:* Chris Glowacki • *Assoc. Editor:* Craig Ruegsegger • *Assistant Editors:* Joel A. Hess, Joseph E. Irwin • *Graphic Designer:* Vu Nguyen • *Graphic Intern:* Matt O'Gara

CIRCULATION
Subscriber Services Director: Sandy Baum • *New Business Circ. Mgr:* Wayde Klingbeil • *Multi-media Promotions Manager:* Rick Junkins • *Promotions Analyst:* Patrick Walsh • *Renewal Mgr.:* Paige Rogers • *Billing & Collections Manager:* Rebecca Cunningham • *Circ. Marketing Analyst:* Kris Schlemmer • *Assoc. Circ. Marketing Analyst:* Paula M. DeMatteis • *Sr. Graphic Designers:* Mark Hayes, Robin Friend

CORPORATE SERVICES
VP of Finance: Mary R. Scheve • *Controller:* Robin Hutchinson • *Sr. Account.:* Laura Thomas • *Accts. Payable:* Mary J. Schultz • *Accts. Receivable:* Margo Petrus • *Production Dir.:* George Chmielarz • *Electronic Publishing Director:* Douglas M. Lidster • *Network Administrator:* Cris Schwanebeck • *PC Maint. Tech.:* Robert Cook • *Pre-press Image Specialists:* Troy A. Clark, Minniette Johnson • *New Media Mgr.:* Gordon C. Gaippe • *Web Site Art Dir.:* Gene Pedersen • *Web Server Admin.:* Carol Schoeppler • *Web Content Mgrs.:* David Briggs, Sue M. Moe • *Web Designer:* Kara Blessing • *Professional Development Dir.:* Michal Sigel • *H.R. Asst.:* Kirsten Koele • *Office Mgr.:* Noelle Carroll • *Receptionist:* Jeanne Johnson • *Mail Room/Delivery:* Lou Webber

WOODSMITH MAIL ORDER
Operations Director: Bob Baker • *Customer Service Mgr.:* Jennie Enos • *Warehouse Supr.:* Nancy Johnson • *Buyer:* Linda Jones • *Tech. Service Rep.:* Johnny Audette • *Admin. Assist.:* Nancy Downey • *Cust. Serv. Team Leader:* Tammy Truckenbrod • *Sr. Cust. Serv. Reps.:* Anna Cox, April Revell • *Cust. Serv. Reps.:* Ed Arthur, Deborah Rich, Valerie Riley • *Warehouse:* Sylvia Carey, Sheryl Knox, Al Voigt

WOODSMITH STORE
Mgr.: Dave Larson • *Asst. Manager:* Tim Thelen • *Sales Staff:* Wendell Stone, Jim Barnett, Larry Morrison, Mark Johnson, Gregory Kauzlarich, Joe Kucera • *Office Mgr.:* Vicki Edwards

Woodsmith® (ISSN 0164-4114) is published bimonthly (Feb., Apr., June, Aug., Oct., Dec.) by August Home Publishing Company, 2200 Grand, Des Moines, IA 50312.
Woodsmith® is a registered trademark of August Home Publishing.

Copyright© 2001 August Home Publishing Company. All rights reserved.

Subscriptions: Single copy: $4.95. One year subscription (6 issues), $24.95. (Canada/International add $10 per year, U.S. funds.)
Periodicals Postage Paid at Des Moines, IA and at additional offices. USPS/Perry-Judd's Heartland Division Automatable Poly.
Postmaster: Send change of address to *Woodsmith*, Box 37112, Boone, IA 50037-2112.
Subscription Questions? Write to *Woodsmith*, P.O. Box 842, Des Moines, IA 50304-9961 or call 1-800-333-5075, 8:00 am to 5:00 pm, Central Time, weekdays. Or send an e-mail to: orders@woodsmith.com
E-Mail: woodsmith@woodsmith.com
World Wide Web: http://www.woodsmith.com

Printed in U.S.A.

SAWDUST

One thing that has always impressed me about woodworkers is their willingness to share. Whether it be a tip or a technique or just lending a helping hand, you can rely on woodworkers to help. And I'm proud that *Woodsmith* has played a part in sharing information and project ideas that will endure over time.

In this spirit, I would like to share with you a letter from the publisher and founder of *Woodsmith*.

Terry

Payday for Charity
Aid for September 11, 2001

All of us at *Woodsmith* offer our thoughts and prayers to those who lost loved ones and friends in the September 11th tragedy. And to the heroes who continue the work of rescue, rebuilding, and protecting us.

During the past few weeks, as we have tried to turn our attention back to our jobs, we also began thinking of ways we could help those in need. As a way to extend a helping hand, our company, August Home Publishing, is making a contribution to charities in an amount equal to our payroll for September 11, 2001. In addition, individuals on the *Woodsmith* staff and the rest of the company are voluntarily contributing all or part of that day's pay.

It's our sincere hope that this contribution helps those who have suffered so much and aids in the vital work of rebuilding our hopes and dreams for the future. And I add my prayers that God may guide our efforts to work for a better world of peace and harmony.

Donald B. Peschke, Publisher

STATEMENT OF OWNERSHIP, MANAGEMENT, AND CIRCULATION
(Required by 39 U.S.C. 3685)

1. Publication Title: *Woodsmith*. 2. Publication No.: 0164-4114 3. Filing Date: September 20, 2001. 4. Issue Frequency: Bimonthly. 5. No. of issues published annually: 6 (six). 6. Annual subscription price: $24.95. 7. Complete mailing address of known office of publication: 2200 Grand Avenue, Des Moines, (Polk County), Iowa 50312-5306. 8. Complete mailing address of the headquarters or general business offices of the publisher: 2200 Grand Avenue, Des Moines, (Polk County), Iowa 50312-5306. 9. Full names and complete mailing addresses of publisher, editor, and managing editor: Publisher: Donald B. Peschke, 2200 Grand Avenue, Des Moines, Iowa 50312; Editor: Terry J. Strohman, 2200 Grand Avenue, Des Moines, Iowa 50312. 10. Owner: August Home Publishing Company, 2200 Grand Avenue, Des Moines, Iowa 50312; Donald B. Peschke, 2200 Grand Avenue, Des Moines, Iowa 50312. 11. Known bondholders, mortgagees, and other security holders owning 1 percent or more of total amount of bonds, mortgages or other securities: None. 12. (Does not apply.) 13. Publication Title: Woodsmith. 14. Issue Date for Circulation Data Below: July/August 2001 15. Extent and nature of circulation:

	Average no. copies each issue during preceding 12 months	Average no. copies of single issue published nearest to filing date
A. Total number of copies (net press run)	325,254	329,334
B. Paid and/or requested circulation:		
1. Paid/requested outside-county mail subscriptions stated on Form 3541	272,657	271,131
2. Paid in-county subscriptions	0	0
3. Sales through dealers and carriers, street vendors, counter sales, and other non USPS paid distribution	18,135	19,556
4. Other classes mailed through the USPS	0	0
C. Total paid and/or requested circulation	290,792	290,687
D. Free distribution by mail, samples, complimentary, and other free copies		
1. Outside-county as stated on Form 3541	851	449
2. In-county as stated on Form 3541	0	0
3. Other classes mails through the USPS	0	0
E. Free distribution outside the mail (carriers or other means)	0	0
F. Total free distribution	851	449
G. Total distribution	291,643	291,136
H. Copies not distributed	33,611	38,198
I. Total	325,254	329,334
J. Percentage Paid and/or requested circulation	99.71%	99.85%

16. Publication of Statement of Ownership. Will be printed in the Dec. 2001 (#138) issue of this publication.
17. I certify that all information furnished on this form is true and complete. (signed) Terry J. Strohman, Editor

On occasion, we allow companies whose products and services may be of interest to you to send advertising mail to our subscribers. We are careful to choose ethical companies that have information of genuine interest to our subscribers. Most of our subscribers appreciate these materials. However, if you prefer to have your name deleted from the mailing list made available to other companies, please write to us at Woodsmith, 2200 Grand Avenue, Des Moines, IA 50312

A LOOK INSIDE

CONTENTS

Features

Formal Hall Table 6

This elegant project offers plenty of woodworking challenges — long tapered legs, optional scroll sawn corner brackets, beading around the drawers, and solid walnut construction.

Roll-Around Storage Cart 18

A unique open design makes this more than just a utility cart. The contrast between the cherry and maple pieces makes it a handsome addition to any room. And look closely — those cherry pieces on the sides are actually the drawer runners.

Table Saw Tune-up 26

Think you should be getting better results from your table saw? Follow these simple tips, and you should notice real improvement in your saw's performance. Best of all, you can do a tune-up in less than an afternoon — and you won't need any special tools.

Bracket Wall Shelf 30

Two shelves. Two different styles. But both versions are built with the same basic procedures. And it's easy to make either shelf whatever length you need to fit the space on your wall.

Dado Jig 34

A simple groove makes it easy to position this jig perfectly every time you rout a dado. An adjustable stop sets the length for stopped dadoes. Or remove the stop and use the jig as a straightedge for routing dadoes all the way across a panel.

Departments

Tips & Techniques 4
Shop Notes 16
Sources 35

Formal Hall Table *page 6*

Roll-Around Storage Cart *page 18*

Table Saw Tune-Up *page 26*

Bracket Wall Shelf *page 30*

TIPS & TECHNIQUES

Roller Featherboard

▲ *A spring adds pressure, while the roller lets the workpiece glide by.*

When using vertical raised panels bits in the router table, the stock is held on edge. If you try to steady the workpiece with a regular featherboard, it only puts pressure along the bottom.

I came up with a featherboard that applies pressure to more of the panel. If you look at the drawing below, you can see that it's simply an L-shaped fence with a pair of appliance casters attached to it. A set of medium-weight springs presses the casters against the workpiece. These casters let the stock glide easily past the bit while keeping it pressed firmly to the router table fence.

The base and fence of the featherboard are made from medium density fiberboard (MDF). I drilled the holes for the studs slightly larger than the stud diameter. This allows the caster to move in and out easily. And since the studs on my casters were rather short, I also counterbored the holes as seen in detail 'a.'

The last thing to do is to put the springs and casters in place before the base and fence are glued and screwed together.

Rob Reyher
Michigan City, Indiana

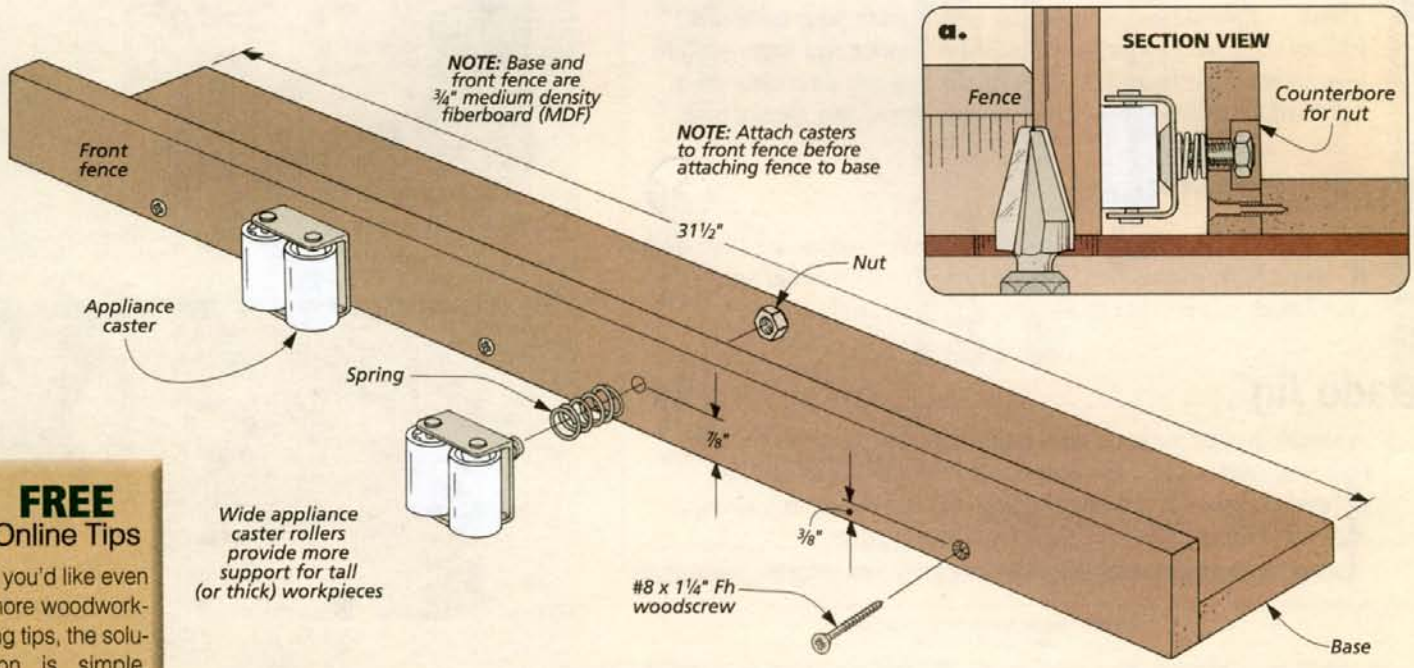

FREE
Online Tips

If you'd like even more woodworking tips, the solution is simple. Just visit us at our web site and sign up to receive a free tip via email every week.

www.woodsmith.com

BB Indicators

One thing that I've found frustrating is marking the locations for dowels when gluing two boards together. The holes in one board have to align perfectly with those in the other board. Here's a quick and accurate way to accomplish that.

All you need to do is tape BBs to the edge of one board (Fig. 1). Then clamp the boards together as if they were being glued up.

The BBs will leave a "dimple" in the edge of each piece (Fig. 2). This gives you a matched pair of marks to position your bit when you drill for dowels.

James Buse
St. Charles, Missouri

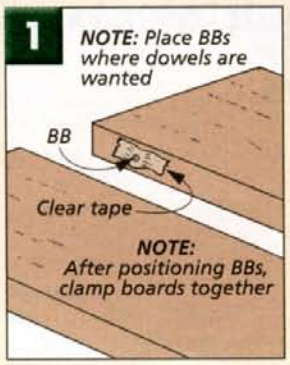

Locking Dowels for Dadoes

A recent project for my shop called for quite a few drawers. I wanted a joint that was easy to make and would also stand up to heavy use.

I decided to cut dadoes in the drawer fronts to accept the sides. While this joint is quick and easy to cut, it's not very strong. So to "beef it up," I added a pair of dowels that lock each joint like a key.

After assembling each drawer, a couple of holes are drilled on each joint line, as shown in Fig. 1. This allows a short dowel to be glued into the hole for a "locking" pin.

The size of the dowels are determined by the thickness of the drawer material. With ½"-thick stock, I used a ⅛"-dia. dowel. And don't worry about cutting them to perfect length. Just trim them flush with a chisel after they're glued in (Fig. 1a).

Since most small drill bits are short, repeat the process on the top of the joint (Fig. 2). The dowel doesn't have to go all the way through — it will just look like it did.

Marty Rosen
Venice, Florida

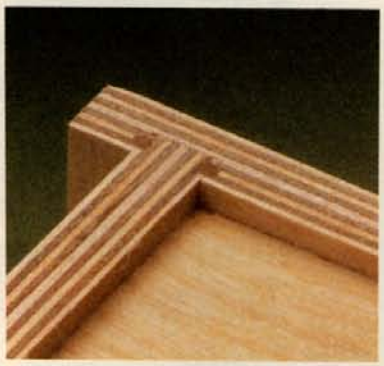

▲ *Dado joints can be reinforced with dowels, which also produces a unique "locking" joint.*

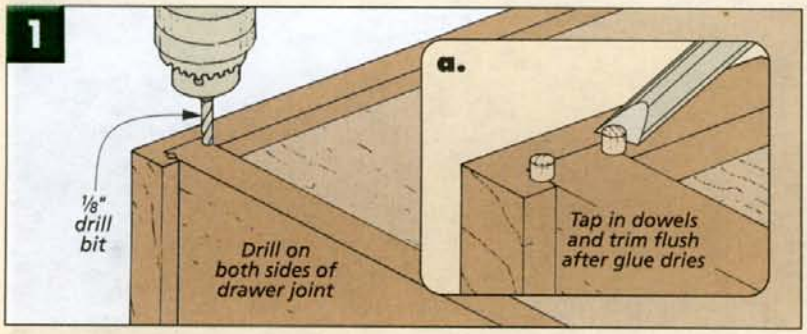

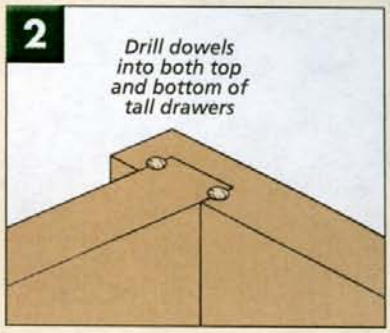

Vacuum Your Glue

On several occasions I've had to repair cracks and checks in wood and furniture. The biggest problem is trying to get the glue spread throughout the crack.

I've tried blowing glue in with compressed air, but that tends to get messy. So instead, I use my shop vacuum to *pull* the glue into the area.

I place the nozzle below the crack and turn on the vacuum, as shown in the drawing at right. Then as glue is added on the top, it's slowly sucked all the way through the crack.

Once the glue comes out the other side, all that's left is to clamp the board.

Mark Palmer
Richland, Washington

QUICK TIPS

A quick alternative to tack cloths are *Pledge Grab-Its*. This disposable cloth will help pick up any fine dust left over from light sanding between sealer and finish coats.

It also helps to show rough and unsanded areas. The cloths catch and leave small white fibers on the unsanded surfaces of a rough finish coat.

Terry Thomas
Shepherdsville, Kentucky

Trying to peel and start the edge of a roll of tape can be frustrating. To avoid this, stick a bread bag lock under the end before putting it away.

Jerry Kynsi
Kelso, Washington

SUBMIT YOUR TIPS

If you have an original shop tip, we would like to hear from you and consider publishing your tip in one or more of our publications. Just write down your tip and mail it to: *Woodsmith,* Tips and Techniques, 2200 Grand Avenue, Des Moines, Iowa 50312. Please include your name, address, and daytime phone number in case we have any questions. If you would like, FAX it to us at 515-282-6741 or send us an email message at: woodsmith@woodsmith.com. We will pay up to $200 if we publish your tip.

FORMAL HALL TABLE

Don't let the understated elegance and exquisite details fool you. The techniques for building this small table are pretty straightforward.

▲ *You don't have to add the scrollsawn corner brackets to end up with a handsome-looking hall table.*

There's an understated elegance to this small table, and it's not hard to see where it comes from. The tapered legs and scrollsawn brackets give the table a light, graceful appearance. Small strips of bead molding highlight the drawers and the bottom edges of the aprons. And the dark walnut adds to the "rich," formal look of the project.

The nice thing is that none of these details are difficult to "pull off." The long, gradual tapers on the legs were cut with a shop-made jig. The scrollsawn brackets are small, fairly simple curves with only one "inside" cut to make. (The hall table also looks fine without these corner brackets, as shown in the inset photo at right.) And the different pieces of bead molding are simply routed with round-over bits.

Finally, if you can't find any walnut locally, you can always build the table out of cherry or mahogany. (The only plywood you'll need is ¼" maple.) These woods are often used for formal furniture, and their subtle grain won't detract from the overall elegance of the table.

Construction Details

OVERALL DIMENSIONS:
30"W x 18"D x 28"H

Frames joined with stub tenon and groove

Rails notched to fit around legs

Lower frame includes 1/4" maple plywood dust panels

NOTE: *Table built out of 8/4 and 4/4 walnut. Cutting diagram included on page 15*

Drawers fit into openings created by vertical dividers

Antique brass, bail-style pull (see page 35 for mail order sources)

FALSE FRONT

1/8"-thick bead wraps around edges of drawer and stands slightly proud of table

Machine-cut dovetail

NOTE: *Drawers are made from 1/2"-thick maple and 1/4" maple plywood*

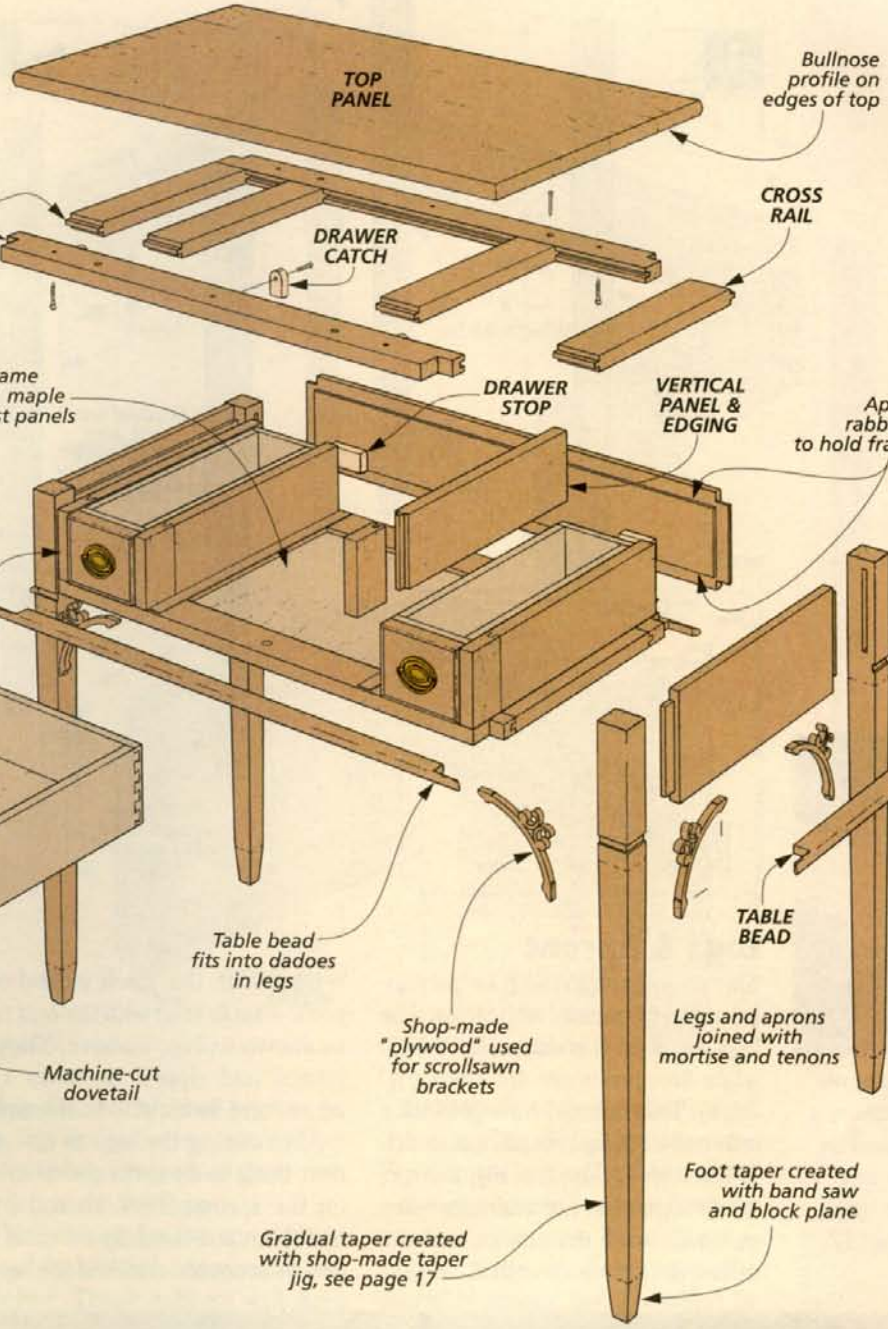

MATERIALS & SUPPLIES

A Legs (4)	1 1/2 x 1 1/2 - 27 1/4	**O** Lg. Drawer Fr./Bk. (2)	1/2 x 3 1/2 - 13 7/8
B Rear Apron (1)	3/4 x 5 1/8 - 27 1/2	**P** Drawer Sides (6)	1/2 x 3 1/2 - 14 1/4
C Side Aprons (2)	3/4 x 5 1/8 - 15 1/2	**Q** Sm. Dwr. Btms. (2)	1/4 ply. - 3 7/8 x 14 1/8
D Fr./Bk. Rails (4)	3/4 x 2 1/4 - 27 5/8	**R** Lg. Dwr. Btm. (1)	1/4 ply. - 13 3/8 x 14 1/8
E Cross Rails (8)	3/4 x 2 1/4 - 12 3/8	**S** Sm. Dwr. False Fr. (2)	3/4 x 3 1/4 - 4 1/8
F Center Panel (1)	1/4 ply. - 13 1/4 x 12 3/8	**T** Lg. Dwr. False Fr. (1)	3/4 x 3 1/4 - 13 5/8
G Side Panels (2)	1/4 ply. - 3 13/16 x 12 3/8	**U** Drawer Bead	1/8 x 7/8 - 80 ln. in.
H Vertical Panels (4)	3/4 x 3 5/8 - 14	**V** Drawer Stops (3)	3/4 x 1/2 - 2
I Vertical Edging (4)	3/4 x 2 1/4 - 3 5/8	**W** Drawer Catches (3)	3/4 x 1/2 - 1 1/4
J Table Bead	3/8 x 1 1/8 - 104 ln. in.	• (8) #8 x 1 1/2" Fh Woodscrews	
K Drawer Runners (6)	3/4 x 1/16 - 15 3/4	• (9) #8 x 1 1/4" Fh Woodscrews	
L Top Panel (1)	3/4 x 18 - 30	• (12) #17 x 5/8" Wire Brads	
M Brackets (6)	3/8 x 3 - 7 rgh.	• (3) 2" Bail Pulls	
N Sm. Drawer Fr./Bk. (4)	1/2 x 3 1/2 - 4 3/8	• (6) 8-32 x 1 1/4" Machine Screws	

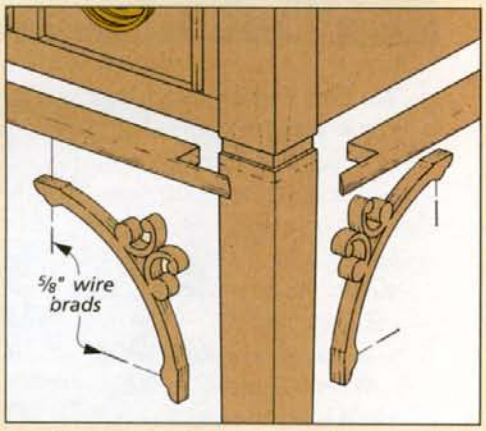

▲ *After the table is nearly complete, small strips of bead molding are notched to fit into the dadoes in the legs. Then the corner brackets are cut out and nailed in place.*

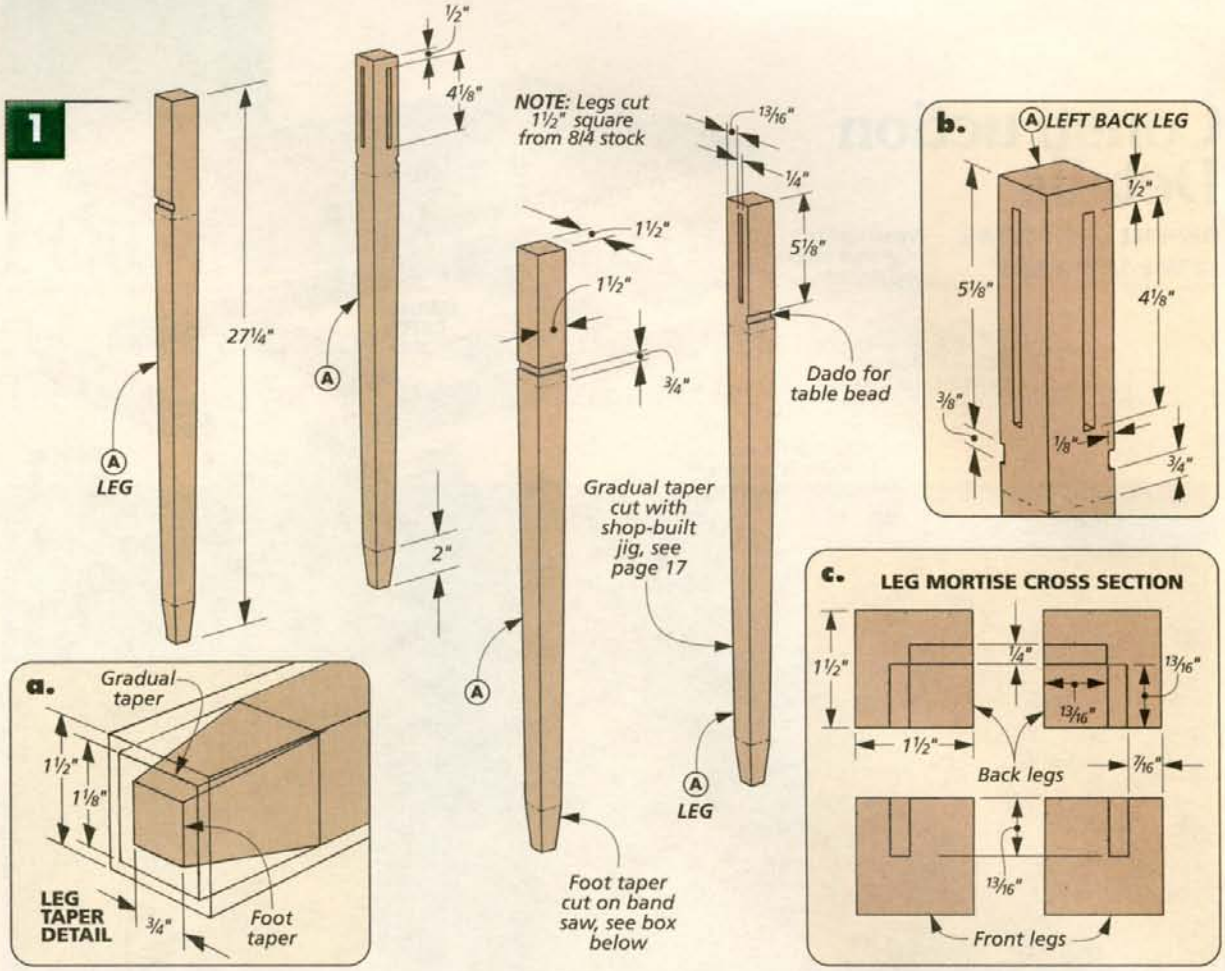

▲ *To cut tapers on all four faces of a leg, you need an adjustable taper jig. To see mine, turn to page 17.*

Legs & Aprons

This project started with a challenge I run into frequently with tables. The legs require 8/4 walnut (1¾" thick), while the aprons are 4/4 stock (¾" thick). This means I have to work a little harder to find boards that match in color and grain. Usually, though, it only takes a few extra minutes when going through the stacks, and the extra effort is sure worth it.

LEGS. With the stock picked out, you'll want to start with the *legs (A)*, as shown in Fig. 1 above. They're planed and ripped down to 1½" square and then cut to final length.

After cutting the legs to size, the next thing to do is cut the mortises for the aprons (Figs. 1b and 1c). I laid them out carefully on each leg and then double-checked the layout by standing them on end in their proper orientation. I also drilled them a little deeper (13/16") than I planned on cutting the tenons (¾") to allow for excess glue.

Next, I cut ⅛"-deep dadoes for the beading that will wrap around the table after it's assembled, as shown in Figs. 1 and 1b. Where before, the mortises were cut on the

CREATING THE FOOT TAPERS

To create the tapers at the bottom of the legs, you won't need a special jig. As you can see in Steps 1 and 2, a band saw (or even a hand saw) and a sharp block plane will do the trick.

Before cutting the taper, you'll need to lay it out on the end of the leg (see Fig. 1a above). And don't try to cut right to the layout lines (Step 1). Stay to the waste side so you can clean up the tapers with a plane.

When cleaning up the tapers (Step 2), you'll want to keep an eye on your layout lines. But even so, you'll still need to sand the faces to get a straight edge between the gradual tapers and foot tapers.

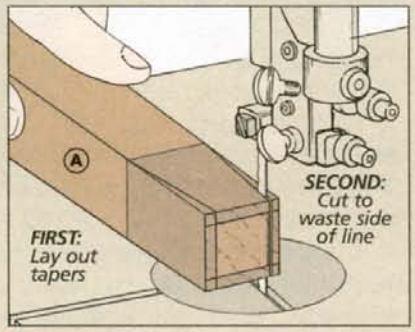

1 *After laying out the two tapers on one face of the leg, rough out the tapers with the band saw. Then rotate the leg and repeat for the other tapers.*

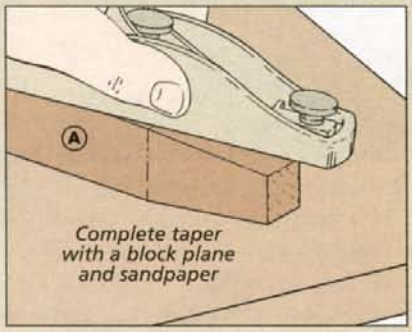

2 *Keeping an eye on the layout lines on the faces and ends of the legs, clean up the tapers with a block plane. Finally, sand the faces as needed.*

inside faces, these dadoes need to be cut across the *outside* faces. And to make sure they align perfectly with each other, I used a stop block clamped to an auxiliary miter gauge fence to position the legs as they were pushed across the dado blade.

Now that the dadoes are cut, the legs are ready to be tapered. There are two tapers here: a long, gradual taper and short taper that creates a "foot" profile near the bottom.

The gradual taper starts 3/4" below the dadoes. And to taper all four sides of the leg, you'll need an adjustable taper jig, see the photo in the left margin. One setting works for two adjacent faces, but then to take care of the last two tapers, the workpiece needs to be repositioned. For more on this jig, turn to page 17.

When the gradual tapers have been cut and sanded smooth, the short tapers on the bottoms of the legs can be cut. This time, though, instead of a taper jig, you'll use a band saw and a block plane, as shown in the box below left.

APRONS. At this point the legs are complete and you can work on the three aprons, as shown in Fig. 2. As I mentioned earlier, the *rear (B)* and *side aprons (C)* are cut to size from 3/4"-thick stock. But the critical thing here is the width (height) of the aprons. They need to come down flush with the shoulder of the dadoes (5 1/8"), as in Fig. 2b. Otherwise, you'll run into problems when adding the beading later.

With the aprons cut to size, tenons can be cut on the ends to fit the leg mortises (Figs. 2a and 2b).

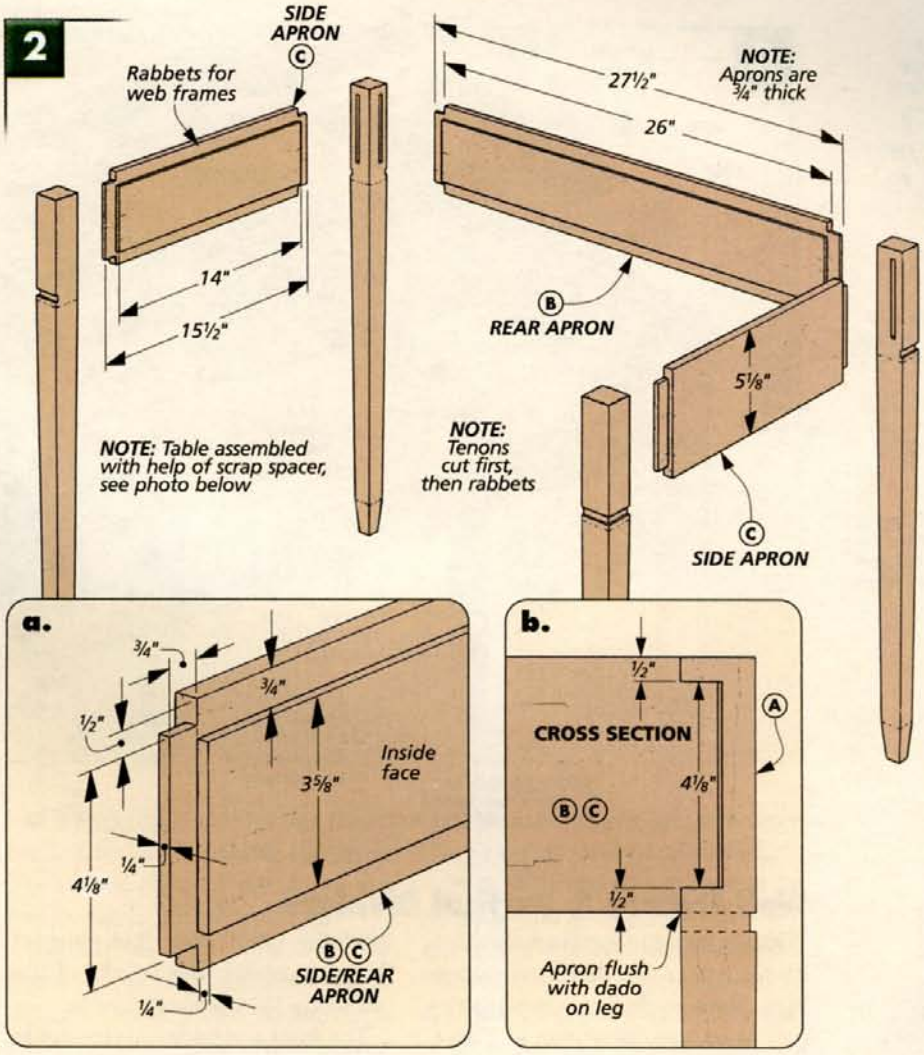

There are a number of ways to do this, but again, the important thing is that the aprons end up flush with the dadoes on the legs.

The last step for the aprons is to rabbet their inside edges, as in Fig. 3 below. These rabbets will hold some web frames later, so the width of the rabbets should equal the thickness of your stock exactly.

ASSEMBLY. Now the legs and aprons are ready to be glued together. You'll notice in the photo below that I clamped a scrap spacer between the two front legs. This spacer is simply there to help keep the assembly square. But it wouldn't be a bad idea to leave it in place for support while you begin work on the web frames that fit into the rabbets.

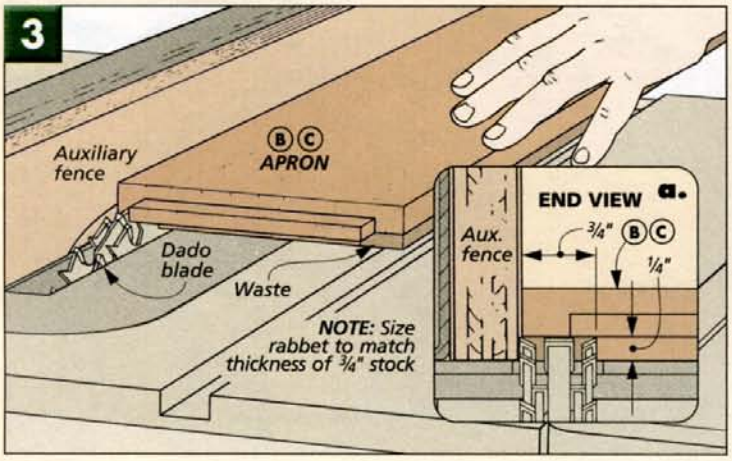

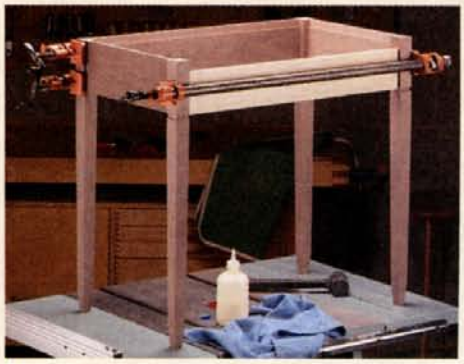

▲ *To keep the sides square while gluing up the table, simply cut a scrap spacer and clamp it between the front legs.*

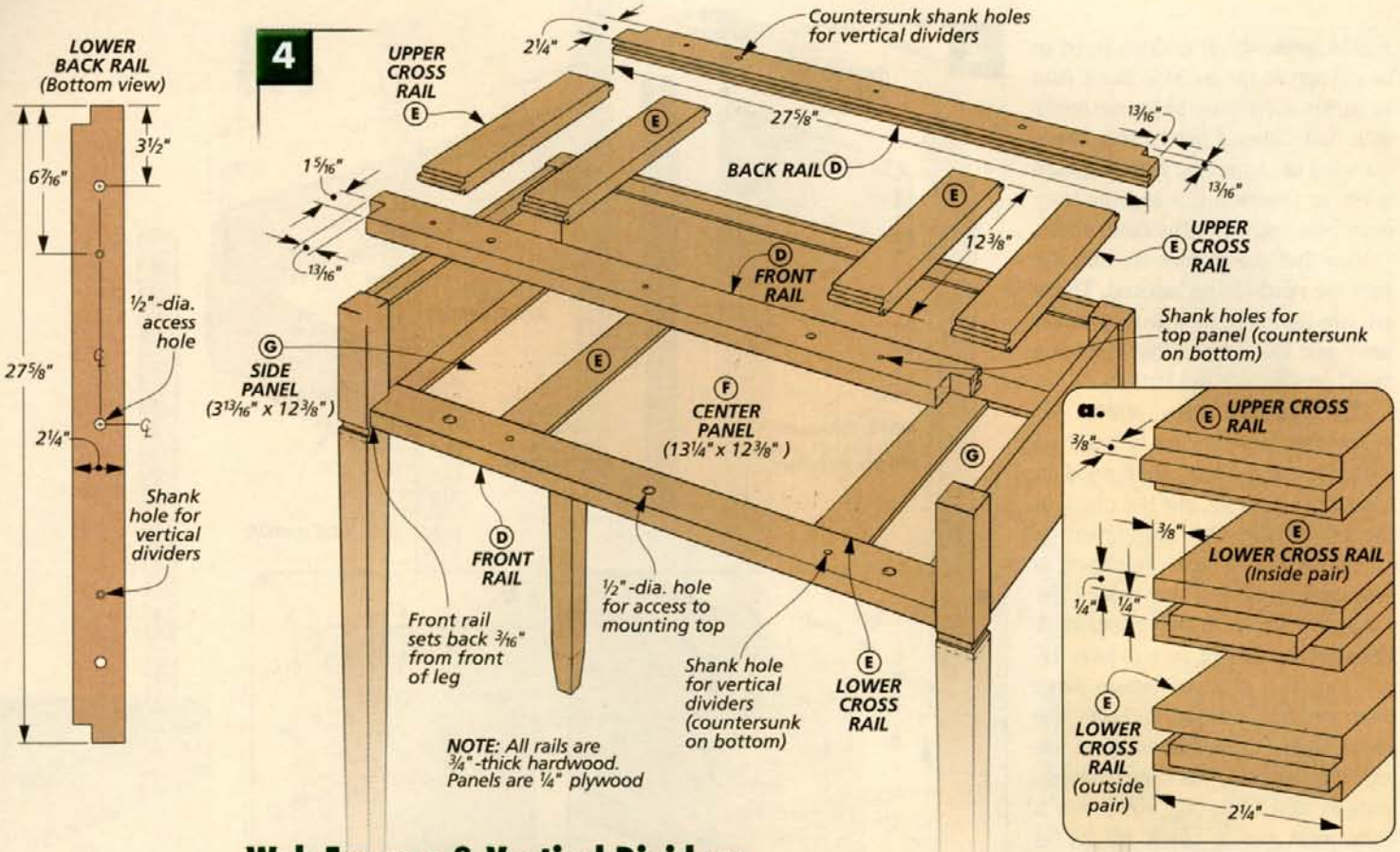

Web Frames & Vertical Dividers

With the legs and aprons assembled, it's time to create the drawer openings. The first thing to do is make a pair of frames, as shown in Fig. 4. (These are identical except that the lower frame has dust panels.) Then four vertical dividers can be built to fit between the frames (Fig. 8).

FRONT & BACK RAILS. The first frame pieces to work on are the *front* and *back rails (D)*, as in Fig. 4. The lower rails here will have the strips of bead glued to them later, so you want the thickness of these rails (and the cross rails that connect them) to match the height of the rabbets in the aprons perfectly.

The front and back rails are cut to length to fit between the rabbets in the *side* aprons. Then they need to be notched to wrap around the legs, which I did in multiple passes on the table saw, as shown in Fig. 5.

The key dimension here is the shoulder-to-shoulder fit between the legs (Fig. 5c). If there are any gaps at these points, they'll be fairly noticeable. So to get a clean, accurate cut, I used my rip fence as a stop, sneaking up on the fit.

As for the depth of these notches, the first thing to note is that they're not the same for the front and back rails. I raised the saw blade so the notch in the front rail would position the rail ³⁄₁₆" from the front face of the leg (Figs. 4 and 5a). The notch in the back rail is sized to fit into the rabbet in the rear apron (Figs. 5b and 5c).

CROSS RAILS. When I was satisfied with the fit of the front and back rails, I clamped the rails in position

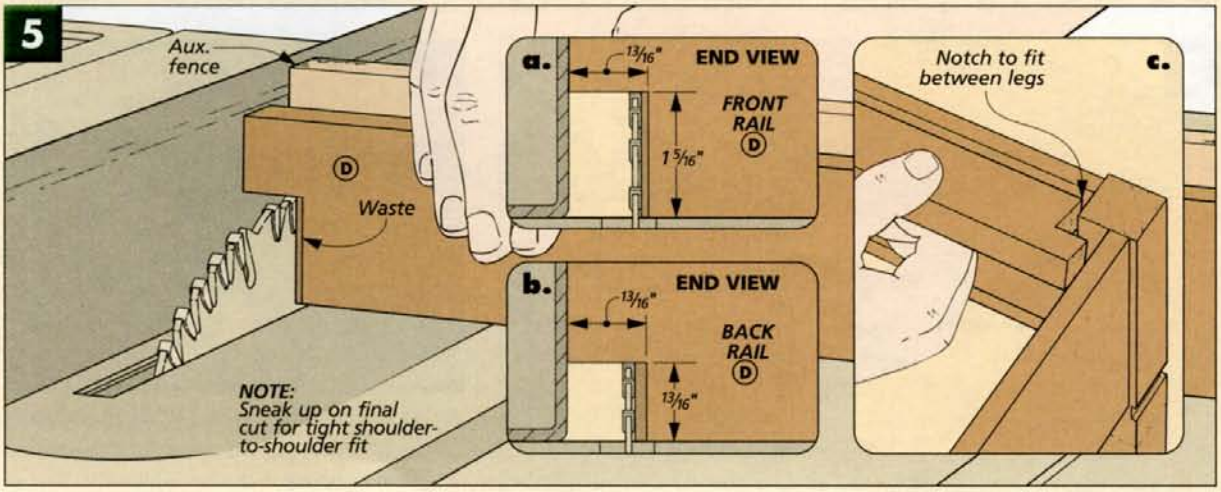

in the table and measured between them to find the shoulder-to-shoulder dimensions of the eight *cross rails (E)*, as in Fig. 4. But when cutting these pieces to size, remember to add 3/4" for the 3/8"-long stub tenon that will be cut on each end.

FRAME JOINERY. The frames are held together with stub tenon and groove joinery, as shown in Figs. 6 and 7. The grooves are sized to hold a piece of 1/4" plywood (for the dust panels in the lower frame), and they're cut in all four of the front and back rails. But to capture the panels, you'll also want to cut the grooves on the lower cross rails (one edge of the outside rails and both edges of the inside rails, as in Fig. 4a.)

With the grooves cut, the stub tenons can be cut on the cross rails (Fig. 4a). Here, the important thing is that the shoulder-to-shoulder dimensions match the opening you measured earlier. (Again, the goal is for the front rail to set back 3/16" from the front face of the leg.)

DUST PANELS. Next, I dry assembled the lower frame and cut a *center panel (F)* and two *side panels (G)* to size from 1/4" plywood. Then before gluing the frames together, I drilled mounting holes in the rails, as you can see in the left margin detail. All four get countersunk holes for attaching the two center vertical dividers (Fig. 8). The upper rails also have countersunk holes for attaching the top panel. But you won't be able to get a screwdriver to the screws unless you drill access holes in the lower rails.

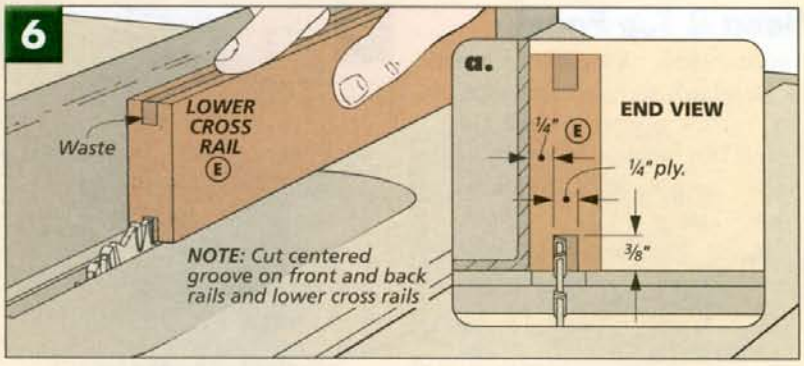

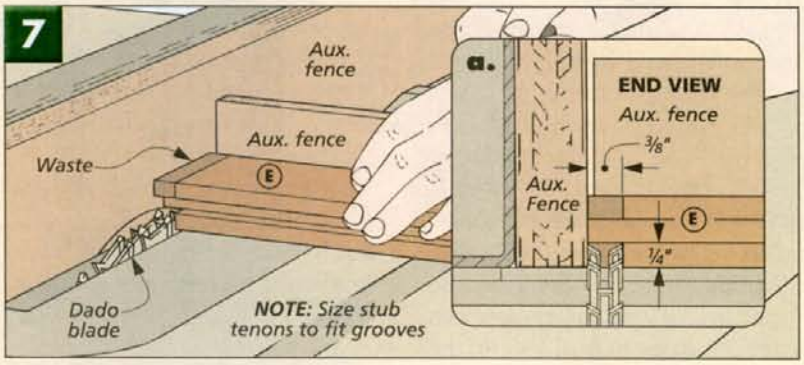

ASSEMBLY. All that's left for these frames is to glue them together. Then when the glue has dried, the frames can be added to the table.

VERTICAL DIVIDERS. Now that the frames are in place, the four vertical dividers can be added, as shown in Fig. 8. Each divider is a two-piece assembly: a *vertical panel (H)* and a breadboard *vertical edging (I)*. These pieces will end up as tall as the drawer opening, but for now, it's a good idea to cut them oversized.

Each panel is joined to the edging with a stub tenon and groove joint, as in Figs. 8 and 8a. This is just like the procedure for the frames, but this time, you can cut the grooves (and tenons) exactly 1/4" wide since there's no plywood panel to hold.

Now the vertical edging can be glued to the panel, and when the glue is dry, the assembly can be cut to final size. The height of the vertical dividers should match the height of the openings. And they should be cut to length so they end up flush with the front rails (Fig. 8a).

ASSEMBLY. To add these dividers to the table, the outside two can be glued to the legs (Fig. 8). The inside two need to be screwed in place, but you've already drilled the shank holes for these. Still, I found that scrap spacers helped position them while I was screwing them in place.

▲ *To make visible layout marks on dark woods like walnut, I like to use a white China marker.*

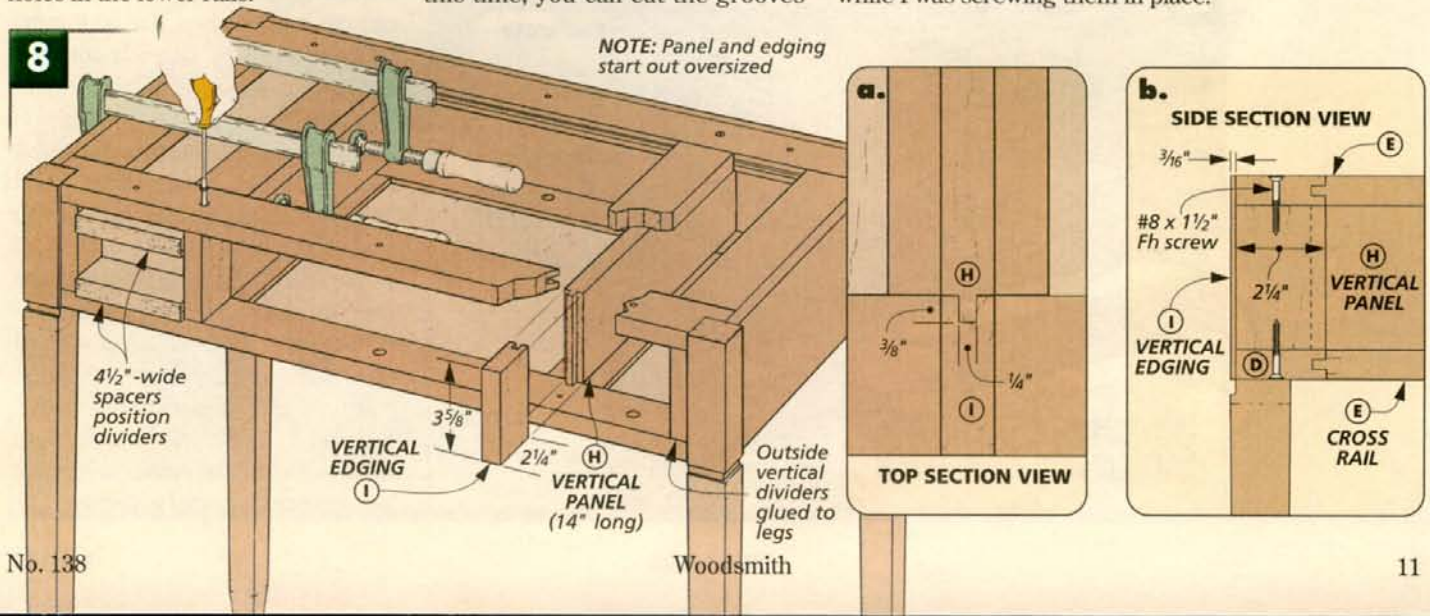

Bead & Top Panel

There are only a few parts left to add to the table before you can begin on the drawers, as you can see in Fig. 9. I built the bead molding and the drawer runners next. Then I made the solid wood panel for the top.

BEADING. The blanks for the *table bead (J)* need to be planed or resawn 3/8" thick to fit the dadoes in the legs, as shown in Fig. 10 below. The bead will end up 1 1/8" wide, but it would be better to leave the blanks extra wide for now so they're a little safer to work with.

With the pieces cut to rough size, the next thing to do is round over the front edge of each blank. This is done at the router table with a 3/16"-radius bit, as you can see in Fig. 10a.

At this point, the bead can be ripped to final width. But before you miter the strips to final length, the ends need to be notched (Fig. 10). This allows the strips to fit between the legs and also positions them so the bead stands proud 3/16".

The procedure here is the same as the one you used to notch the front and back rails of the frame, refer to Fig. 5 on page 10. And as before, you'll want to make sure the shoulder-to-shoulder fit between the legs is gap-free. Only this time, all the notches will be identical. Plus, you'll be able to use a dado blade (so there will be fewer passes to make).

After all the notches are cut, the last step is to miter the ends of the table bead so they will fit around the table. Since the inside corner of the joint will be hidden by the dado, fitting the miters is a matter of sneaking up on each cut until the outside tips of the bead meet (Fig. 9a). Then you can glue the strips to the table.

CORNER BRACKETS. When the bead is in place, the corner brackets can be added, and this process is described in detail on the next page.

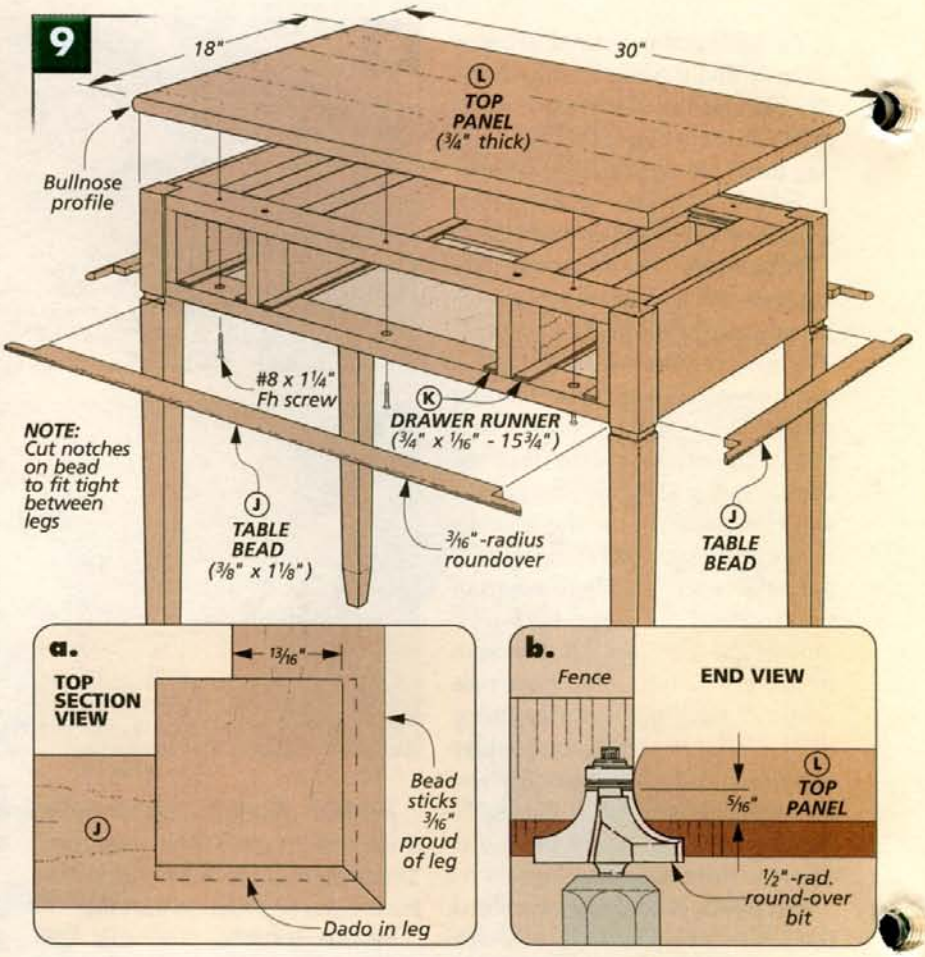

DRAWER RUNNERS. Before working on the top, I also cut six *drawer runners (K)* and glued them to the cross rails inside the table (Fig. 9). These 1/16"-thick strips will create the gap under the drawers, keeping them from wearing on the lower front rail as they're opened and closed.

TOP PANEL. Now you're ready to work on the 3/4"-thick solid wood *top panel (L)*, as shown in Fig. 9. After it's been planed or sanded flat, you can cut it to finished size so it overhangs the legs 1/2" on each side.

Next, a bullnose profile needs to be routed around the edges. It's created with a 1/2"-radius round-over bit raised 5/16" above the table. And you'll want to start with the ends to reduce the chance of chipout.

You could screw the top in place now, but there are some good reasons to wait. For one thing, to add the drawer catches and stops later, you need easy access to the inside. But also, I like to apply finish to both the top and bottom faces so there's less chance the panel will warp.

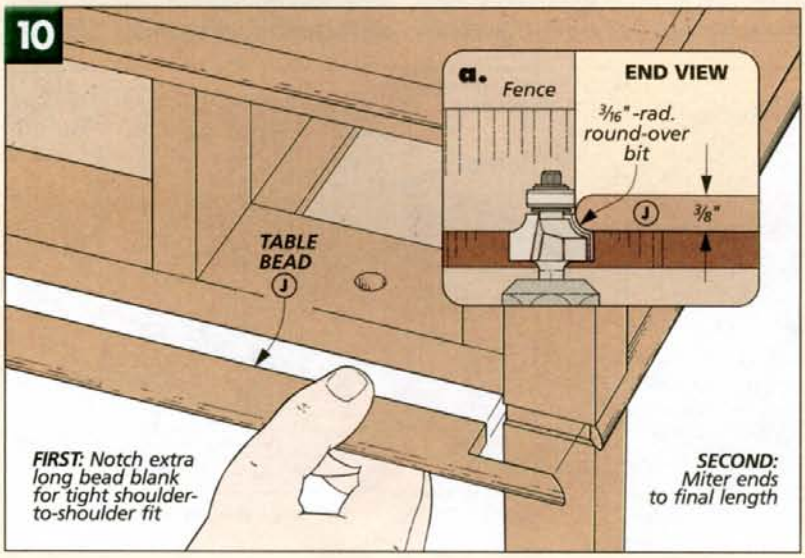

CORNER BRACKETS

When making the corner brackets for this table, I had one concern: The brackets look fragile. And the last thing I wanted was to have one break before (or after) it was in place. But two simple precautions made these pieces plenty strong.

SHOP-BUILT PLYWOOD. First, instead of cutting the *brackets (M)* out of solid wood, I made my own 3/8"-thick "plywood," as you can see in Fig. 1. This way, the grain direction of the center layer runs across the grain on the outside layers, so there are no weak spots.

This isn't as much work as it sounds. The plies are small, and you don't need special clamps or glue. The only thing to watch is the joint line of the two center pieces. It has to be tight, so you don't end up with any gaps.

PATTERN ORIENTATION. As a second precaution, I oriented the pattern on the blanks so the long curve is oriented with the long grain, as in Fig. 1. This means the pattern isn't tucked into the corner of the blank but runs along its length.

CUT TO SHAPE. After the pattern has been attached to the blank, you can begin cutting out the bracket, as shown in Fig. 2. A scroll saw works best here, but you could easily make the one inside cut with a coping saw and cut the outside curves with a band saw and a narrow blade.

I started with the inside opening, drilling a starter hole and cutting the opening with a scroll saw (Fig. 2). When that was done, I concentrated on the curved filigree in the center. Finally, I worked on the gentle curve that connects the leg to the table. What you want here is to make sure the edges end up smooth and parallel to each other.

FINISH AND FIT. Before you attach the brackets to the table, it's a good idea to apply a finish to the bracket. However, you'll want to keep finish off the "pads" where the bracket attaches to the table. And you may have to sand these pads slightly to get a good, tight fit. Then when you're ready to glue and nail them in place (see photo below), drill pilot holes through the brackets so there's no chance of splitting the thin stock.

▲ *The curves of the applied corner backets create a nice contrast to the straight lines on the table.*

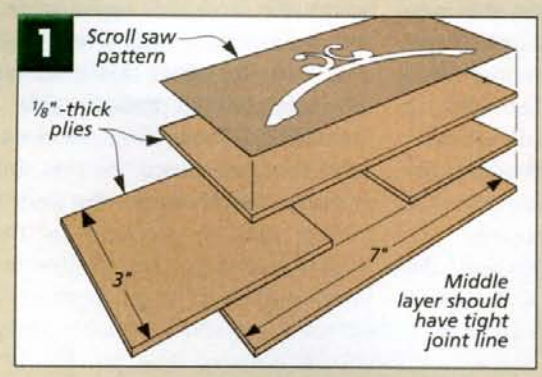

◄ *After drilling pilot holes (to avoid splitting the wood), glue and nail each bracket in place with #17 x 5/8" brads. Then set the brads and fill the holes.*

TEMPLATE DIAGRAM

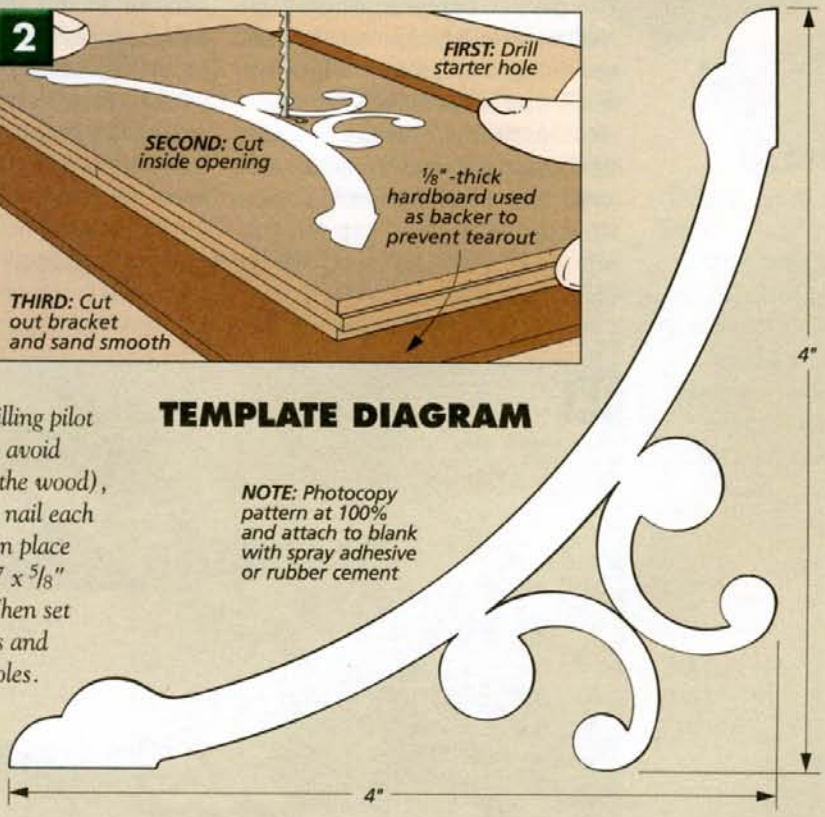

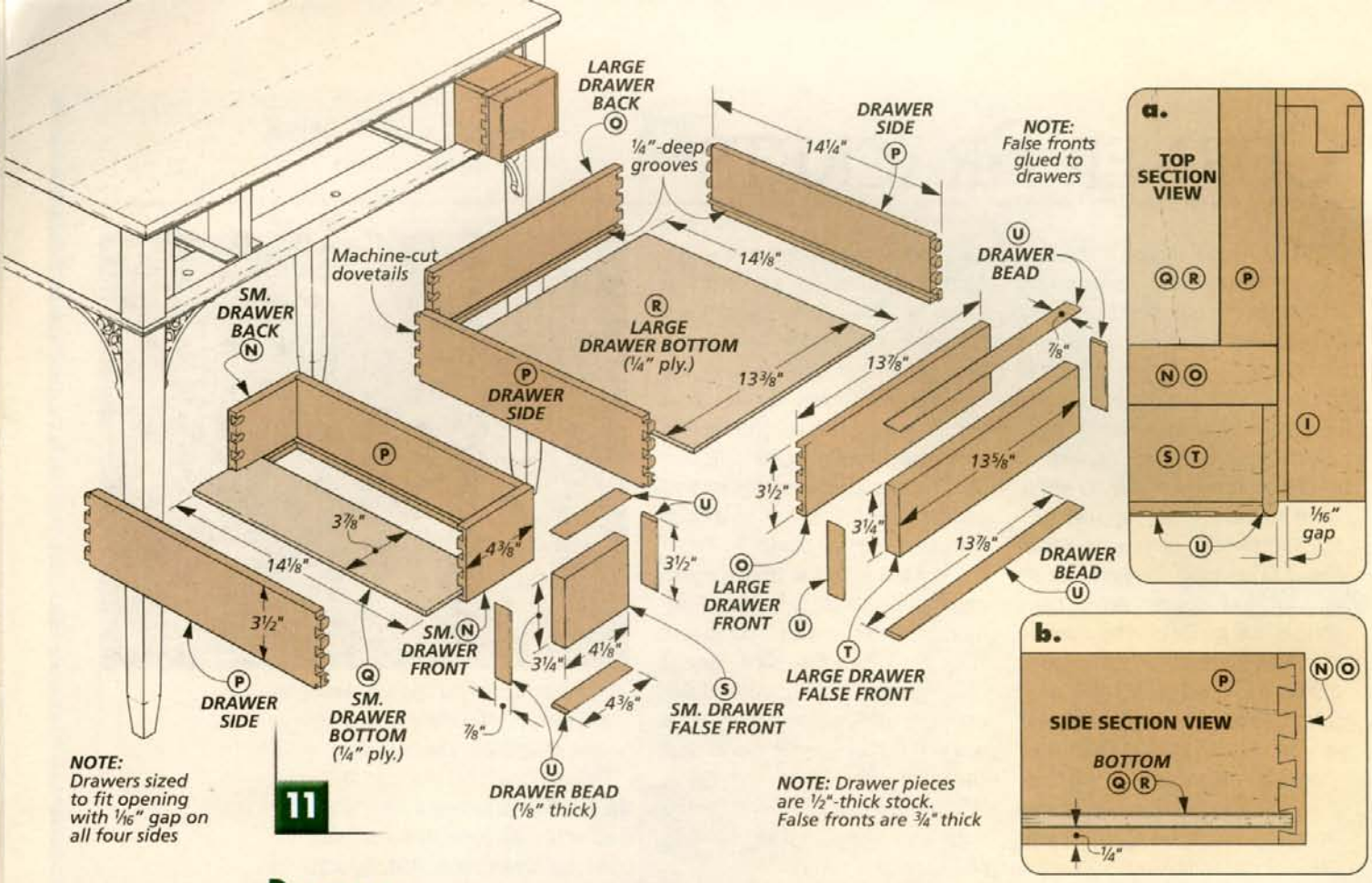

▲ *To fit my dovetail jig, I had to extend the short fronts and backs with a simple platform. The adhesive-backed sandpaper helps keep the pieces from shifting.*

Drawers

One of the focal points of this project is the drawers. And one of the reasons they're so interesting is the small bead profile running around the edges of the false fronts, as you can see in Fig. 11. But other than this detail, they're really fairly typical.

CUT TO SIZE. I built the drawers with ½"-thick maple, and the *small* and *large fronts* and *backs (N, O)* are sized to create a 1/16" gap on each side of the opening (Fig. 11). All the *sides (P)* are identical and are cut to length so the drawer *won't* end up the full depth of the opening. (A stop will be added later so the fronts will be flush with the front of the table.)

DOVETAILS. After the pieces have been cut to size, the next step is to rout half-blind dovetails on all the pieces. This is "business as usual" for the center drawer. But with my dovetail jig (featured in *Woodsmith* No. 58), the fronts and backs of the small drawers were a hair short for the jig to clamp them securely.

My solution was to "extend" the piece with the platform shown in the left margin. It's just a small piece the same width as the front and back pieces that's glued to a piece of ¼" hardboard. A piece of adhesive-backed sandpaper helps prevent the workpiece from shifting as you're routing the dovetails. (Note: You may have to adjust this platform depending on your particular jig.)

DRAWER BOTTOMS. When the dovetails have been routed, the next step is to cut centered grooves on the bottom tails (or sockets) of the drawer pieces for the ¼" plywood bottoms (Fig. 11b). Then you can cut the *small* and *large bottoms (Q, R)* to fit between these grooves.

ASSEMBLY. At this point, you can glue the drawer pieces together. But before you work on the false fronts, first check the fit of the drawers in the table. You may need to sand or plane the drawers so they slide smoothly and have a consistent gap all the way around.

FALSE FRONTS. Typically, false fronts are larger than the drawers to which they're attached. Not here. The ¾"-thick *small* and *large false fronts (S, T)* are actually ¼" smaller than the drawer fronts in width and height (Fig. 11). This allows for the

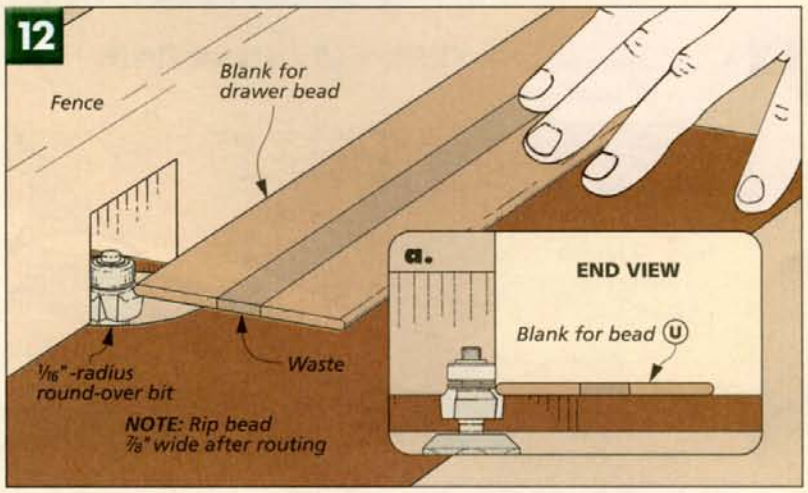

1/8"-thick bead that will be glued to each edge of the false fronts. (The completed false fronts should match the drawer fronts exactly.)

And here's one thing you may want to consider as you lay out the false fronts. Try to find a single board from which all three fronts can be cut. This way the wood grain will run continuously across the three drawers.

DRAWER BEAD. With the false fronts sized, you can make the 1/8"-thick *drawer bead (U)* next. I left these blanks oversized for now. As you can see in Fig. 12, this makes them safer to work with while rounding over the edges.

When the bead pieces have been ripped to final width (7/8"), you can begin the process of mitering them to length so they wrap around the false fronts. Just be sure to use a sparing amount of glue when gluing them in place — you don't want squeezeout on the front faces that could affect the finish.

Now the false fronts can be attached to the drawers. These drawers are small enough that I simply glued them in place, taking care that the edges were flush (Fig. 13a). Then the pulls can be added, as shown in Figs. 13 and 13a.

STOPS & CATCHES. All that's left to do now is add a couple pieces to the table so the drawers "work" better. At the back of each drawer opening, I glued a small *stop (V)*. The thickness of these stops should position the *face* of the drawers (not the bead) flush with the rails and vertical dividers. (Mine were 1/2" thick.)

Finally to prevent the drawers from being pulled out completely, I added a small *catch (W)* to the back edge of the front rail in each opening. Its top corners are relieved so it can pivot up out of the way when you want to remove the drawer.

FINISH. To finish the table, I chose a tung oil varnish, applying a couple coats to both faces of the top panel before screwing it to the table.

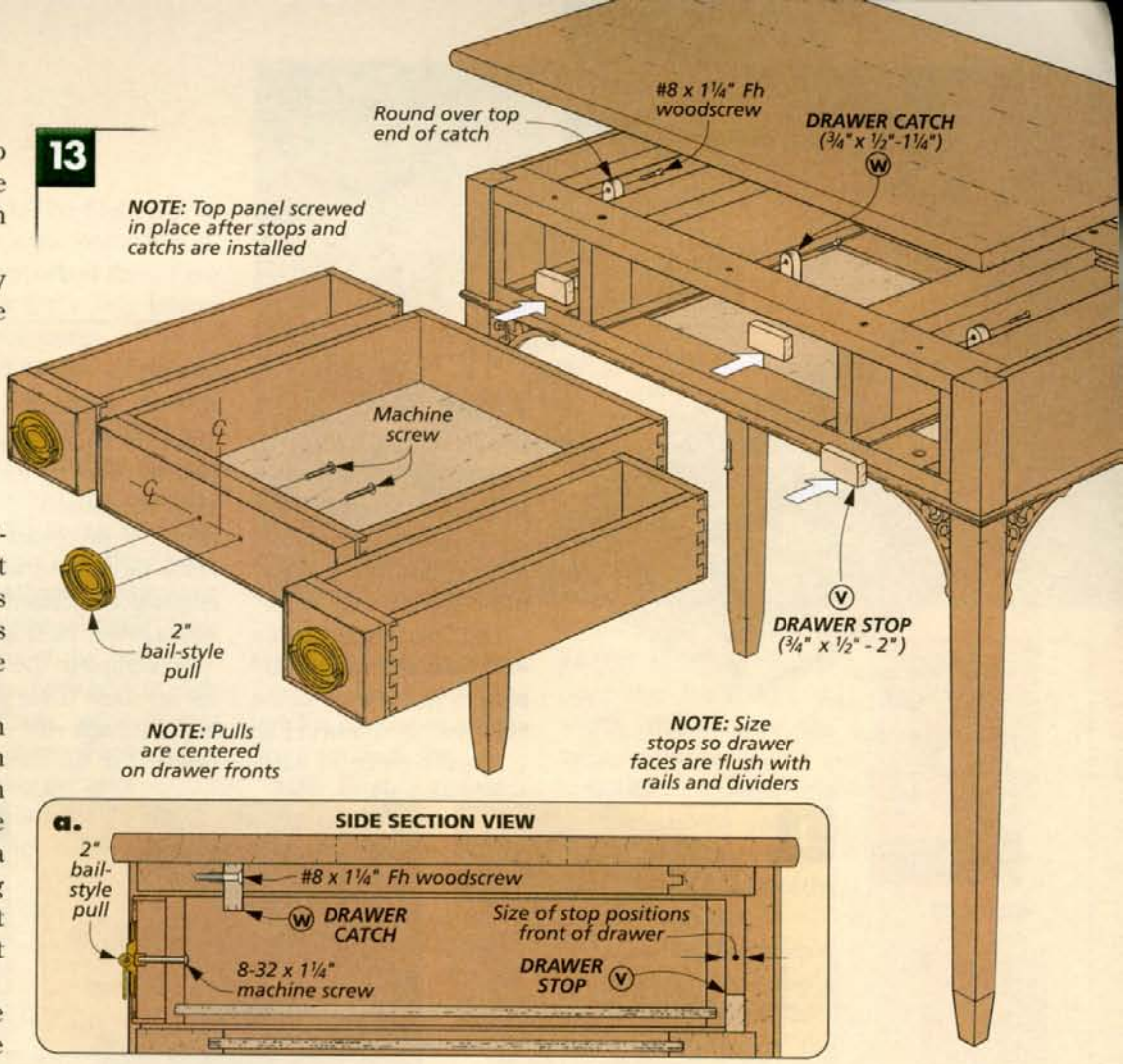

CUTTING DIAGRAM

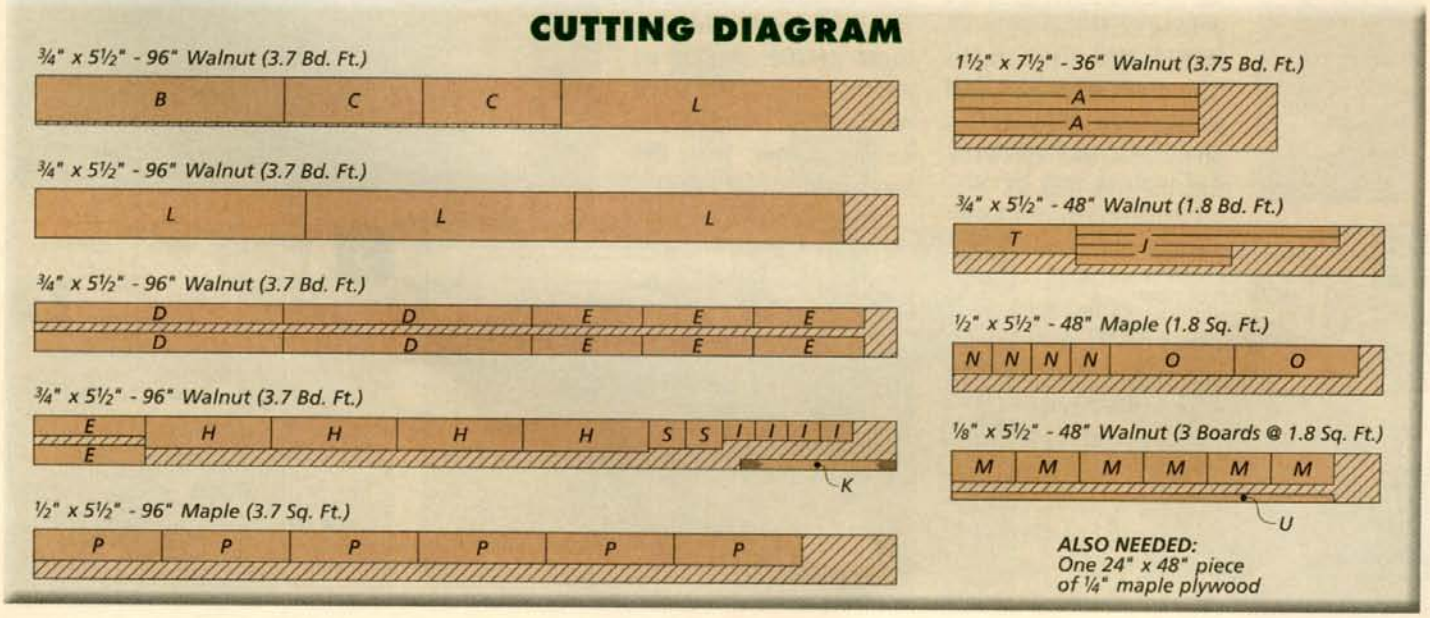

SHOP NOTES

▲ *A T-slot is easy to make with just two cuts on the table saw.*

T-Slot

A toilet bolt and a T-slot are a great combination when you need an adjustable stop, like the one on the router jig on page 35. The slot can be made in a few easy steps.

The first step is to cut a wide slot in a hardwood base to fit the head of the toilet bolt, as shown in Fig. 1. Then a piece of hardboard is glued onto the base to cover up the slot. The hardboard doesn't need to be exact size. Once the glue dries, the edges are trimmed flush with a router bit (Fig. 2).

To complete the slot, I set my dado blade to just cut through the hardboard (Fig. 3). Then I set the rip fence to position the blade about in the center of the blank.

After making a cut, flip the piece end for end to widen the groove and center it on the blank. What you want is a groove that's just wide enough to allow the shank of the toilet bolt to slide easily. W

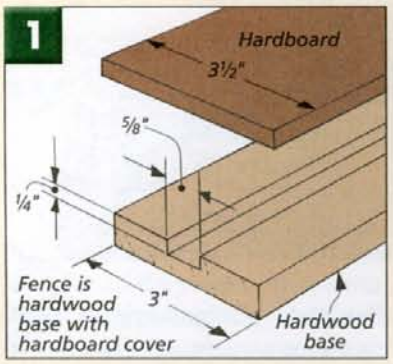

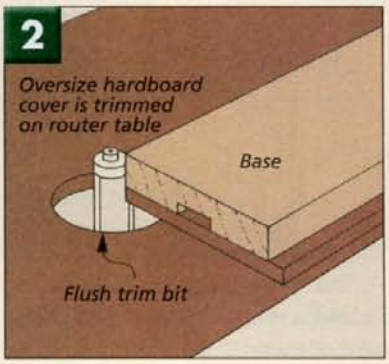

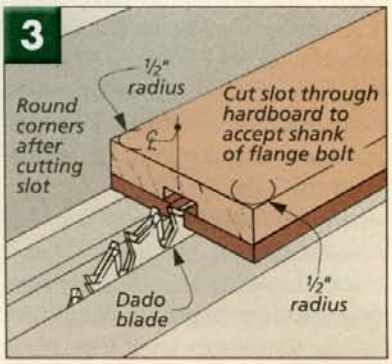

Bracket Profile

The trickiest part of the profile on the brackets for the Colonial shelf on page 33 isn't the curves (Fig. 1). It's getting a crisp, straight cut in the middle of the profile. The brackets were small enough that I made the cut on the table saw before cutting the arcs (Fig. 2).

Once the shoulder cut is made, you can rough cut the arcs on the band saw. A drum sander will clean up to the line for most of the profile, as shown in Fig. 3. But you'll need a file to complete the inside corner that the sander can't reach. W

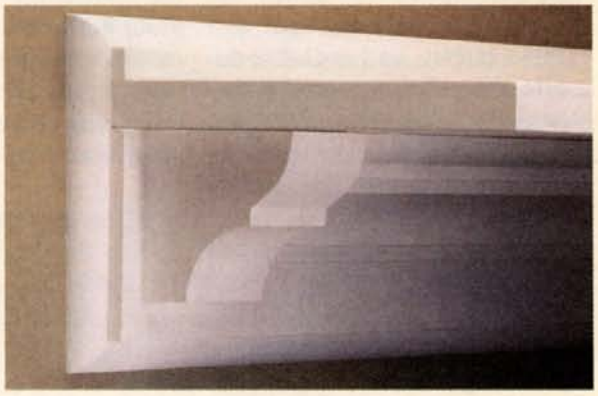

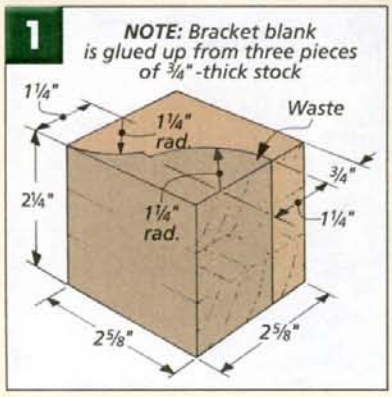

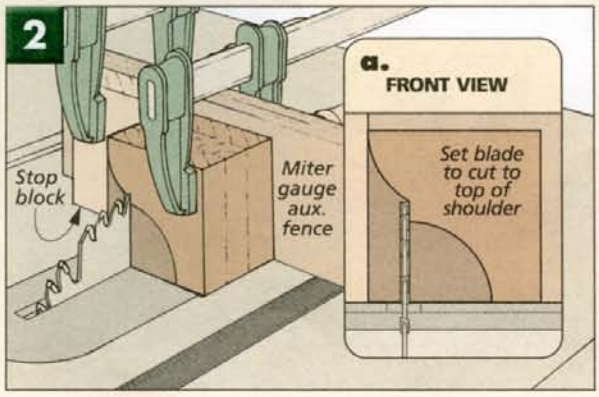

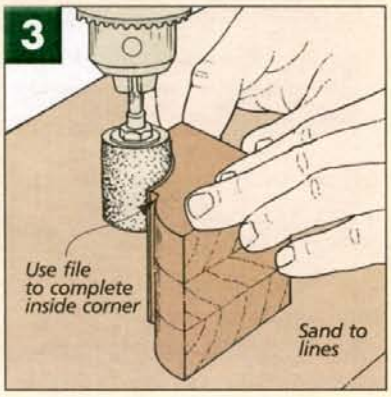

Taper Jig

With four-sided tapers (like those on the legs of the hall table on page 6), you need an adjustable jig. That's because after two faces are tapered, the leg needs to be positioned on the jig to allow for the tapers already cut. I came up with a sled that makes it easy to do this without a lot of fussing.

NOTCH. On this jig, the key to getting the same taper on all four faces is a notch in a stop block at the end of the fence (Fig. 1a). When you cut the third and fourth faces, the notch repositions the leg away from the fence the amount of the taper.

FENCE. The first piece to make is the fence (Fig. 1). The important thing here is that it's a little longer than the taper.

HOLD-DOWNS. After cutting the fence to size, holes can be drilled and counterbored for the carriage bolts that support the hold-downs, as shown in Fig. 1b. The hold-downs themselves are just thin strips of maple. Nuts on two of the bolts support the back edge of each hold-down, while a star knob at the front applies clamping pressure.

The last thing to add to the fence is the notched stop block like you see in Fig. 1a. Make sure the notch is positioned exactly 3/16" from the fence.

BASE. Next, I ripped a piece of hardboard that serves as the base of the jig (Fig. 1). Note: After ripping the hardboard to width, don't move the table saw fence.

ASSEMBLY. Assembling the jig is pretty easy. All you need is a leg with the taper laid out on one of the faces and the end.

To position the plywood fence on the base, place the leg so the layout lines are on the edge of the base, like you see in Fig. 2. Then mark the base along the back edge of the leg. Finally, align the fence on this mark and screw it in place from the bottom.

CUT TAPERS. Now you're ready to cut the tapers. The sequence for doing this is shown in the margin. For the first two faces, the leg rests snug against the fence of the jig.

After the first pass, rotate the leg so the newly tapered face is up. (You may need to re-adjust the hold-downs.) Then make a second pass.

For the last two faces, the leg rests in the notch, as shown in the lower half of the margin. After each pass, rotate the leg so the side you just cut faces up.

Then sand away any saw marks and blend each taper into the top portion of the leg.

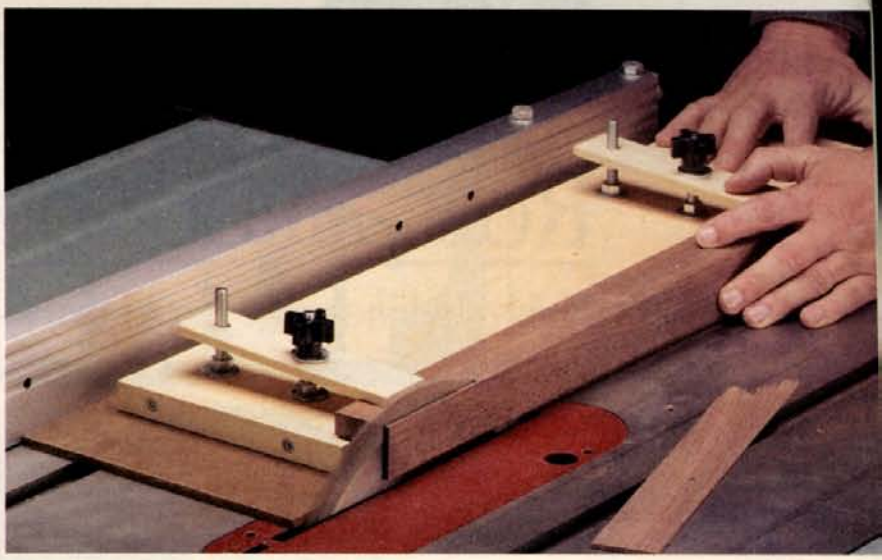

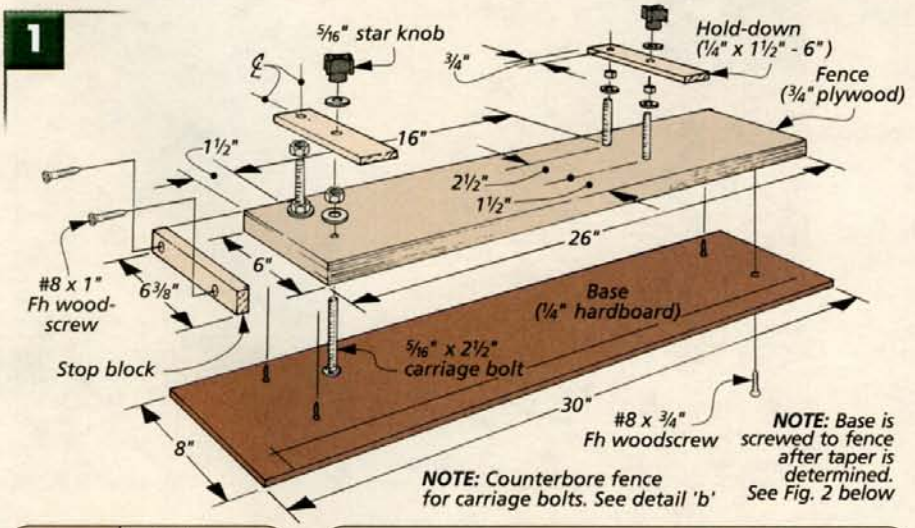

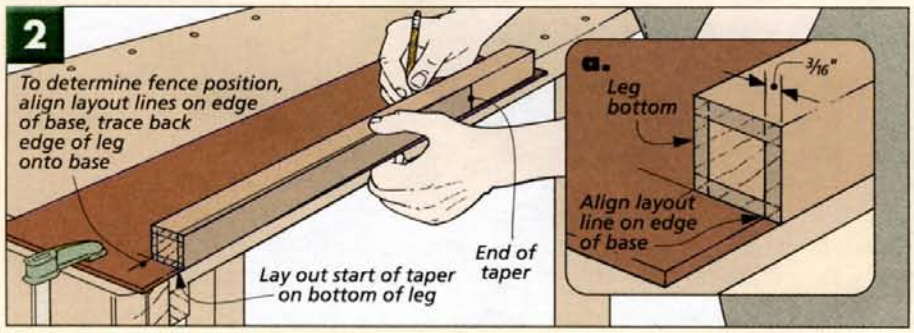

ROLL-AROUND STORAGE CART

Build a stylish storage project that features an open design, contrasting woods, and a unique drawer guide system.

When building drawers, I usually have two goals: to get the drawers to open and close smoothly and to get the front piece to look nice. This means I tend to be a little less picky when it comes to choosing the wood for the sides and back. As long as the pieces are straight and flat, the grain doesn't have to be beautiful. After all, they'll spend most of the time hidden inside the case, right?

INSIDE-OUT PROJECT. Not here. This roll-around cart turns things inside out and puts the drawers on display. Instead of being enclosed inside a cabinet, they're housed in a case made up of open frames. So the drawers can be seen from all four sides — and have to look their best. It's almost like looking at a project through X-ray glasses.

DRAWER RUNNERS. This open design meant I had to come up with some unique solutions for supporting the drawers and guiding them in and out of the case. Normally, both tasks would have been handled with metal slides, but for this project, they would've looked out of place. So I supported the drawers with small hardwood runners. (They're 3/4"-thick cherry, just like the top.)

FALSE BACK. These runners provide support, but they don't guide the drawers in and out of the case. To do that, I added a false back that's identical to the false front.

Both the false front and false back have notches in the corners that wrap around the runners above and below the drawer. And these notches are how the false back guides the drawer. Like a train on a track, the notches in the back trap the drawer between the runners, guiding it as it's pulled open. (You'll want to add a little wax to the runners so the drawers slide quietly and smoothly.)

MATERIALS & SUPPLIES

A	Legs (4)	1 1/2 x 1 1/2 - 25 7/8
B	Drawer Stops (2)	1 1/2 x 3/4 - 25 7/8 rgh.
C	Side Rails (4)	1 1/2 x 1 1/2 - 22 7/8
D	Front/Back Rails (4)	1 1/2 x 1 1/2 - 15 7/8
E	Drawer Runners (10)	3/4 x 3/4 - 25 rgh.
F	Top Panel (1)	3/4 x 18 - 24
G	Top Spacers (1)	1/8 x 3/4 - 74 ln. in.
H	Caster Supports (2)	1 1/2 x 1 1/8 - 15
I	Sm. Drawer Fr./Bk.(6)	1/2 x 3 15/16 - 14 3/8
J	Sm. Dwr. Sides (6)	1/2 x 3 15/16 - 22 1/4
K	Lg. Dwr. Fr./Bk.(2)	1/2 x 6 15/16 - 14 3/8
L	Lg. Dwr. Sides (2)	1/2 x 6 15/16 - 22 1/4
M	Dwr. Btms.(4)	1/4 ply. - 14 3/8 x 21 3/4
N	Sm. False Fr./Bk.(6)	1/2 x 4 11/16 - 14 7/8
O	Lg. False Fr./Bk.(2)	1/2 x 7 11/16 - 14 7/8
P	Drawer Pulls (4)	3/4 x 3/4 - 5

- (10) #8 x 2" Rh Screws
- (4) 2" Twin-Wheel Casters
- (16) #6 x 5/8" Rh Screws
- (32) #8 x 3/4" Rh Woodscrews
- (8) #8 x 1 1/4" Rh Woodscrews

Construction Details

OVERALL DIMENSIONS:
18"W x 24"D x 28¼"H

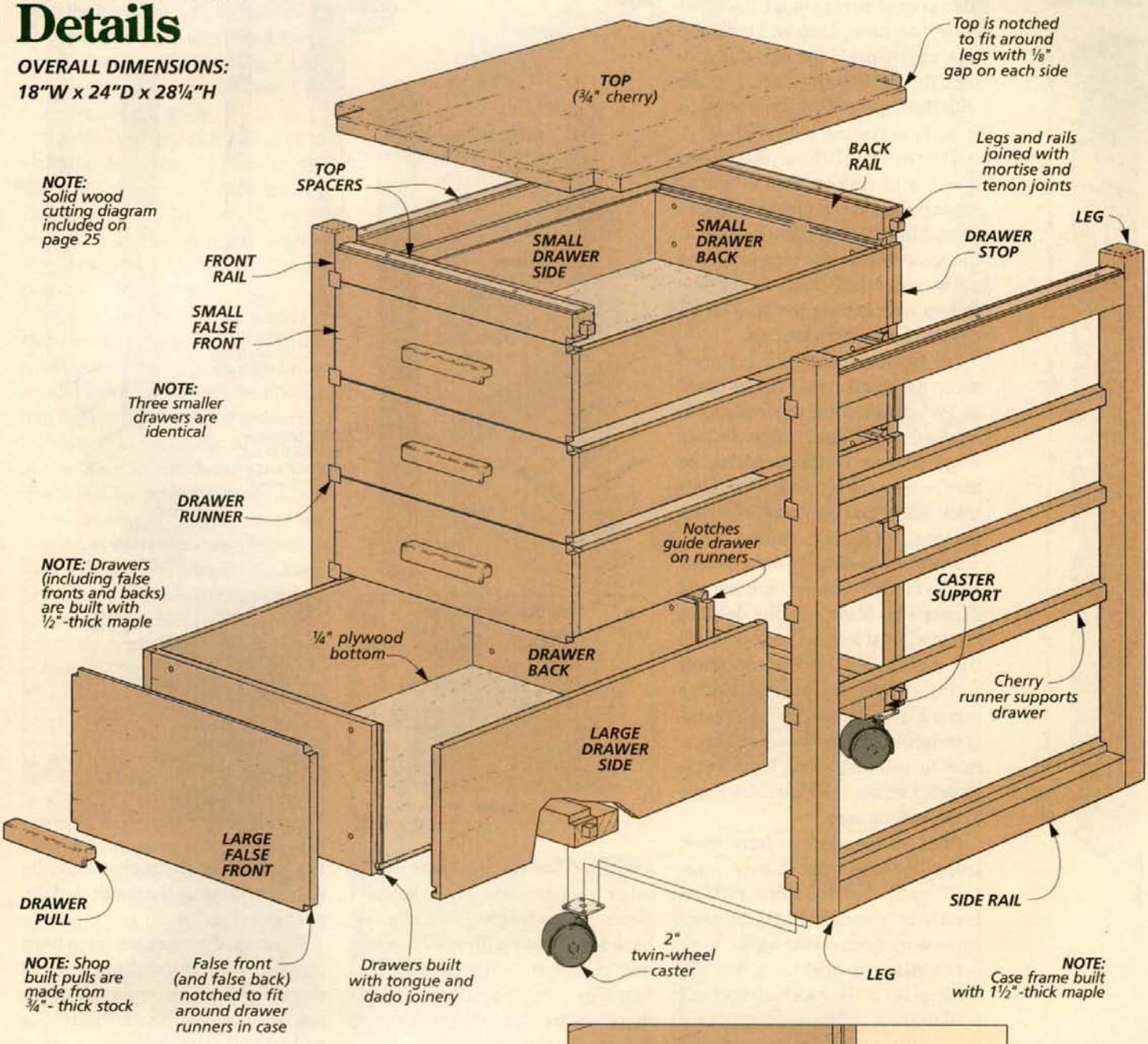

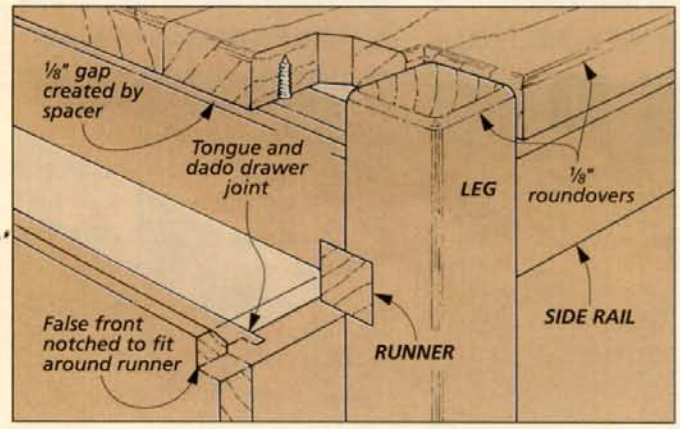

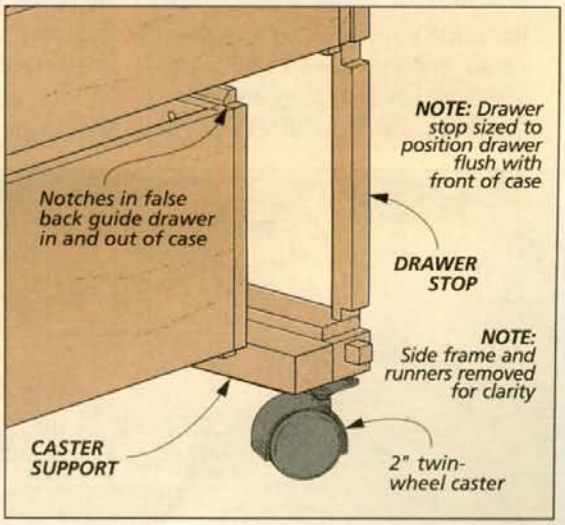

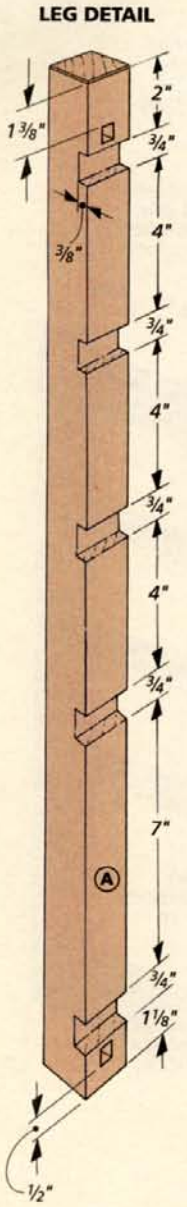

Legs & Side Rails

This project starts out a little differently than most. Usually, I build the legs and then add the rails that connect them. With this cart, I began with the legs *and* the drawer stops in back, as you can see in Fig. 1.

The reason? All these pieces need a series of dadoes that will wrap around the cherry drawer runners later. Making the drawer stops at the same time as the legs saved me a few extra setups, and I didn't have to fuss with getting the stops to fit around the runners later on.

CUT TO SIZE. To begin, I planed some 8/4 maple (1¾" thick) down to 1½" and then cut the *legs (A)* to finished size (Fig. 1). The *drawer stops (B)* start out oversized, so they're also cut ¾" wide from 1½"-thick stock, and they should match the length of the legs for now.

DADOES. Now five ¾"-wide dadoes can be cut ⅜" deep on each leg and drawer stop blank, see the detail in the margin at left. To make sure all the pieces end up with identical dadoes, I used the rip fence (with a scrap block clamped to it) to position each dado, as shown in Fig. 2. And to support these long workpieces, I attached an auxiliary fence to the miter gauge.

After all five dadoes have been cut, you can set the drawer stops aside until after the drawers have been built (page 25). But there's still some work to do on the legs.

MORTISES. The next thing to do to the legs is cut the mortises that will hold the rails. All these mortises are the same size (½" x ½" and cut 1" deep), but you have to be careful about which face they are cut in. The faces with the dadoes each get mortises, but the positions of the other mortises on each leg will depend on whether it's a front or back leg. To keep myself from getting confused, I like to stand the four legs upright to make sure the mortises are laid out correctly, as indicated in Fig. 1a.

To create the mortises, I drilled a ½"-dia. hole to rough out most of the waste, as you can see in Fig. 3. From there, a sharp chisel can be used to square up the corners of the mortises (Fig. 3a).

When all the mortises have been squared up, the last thing to do is round over the *top* end of each leg using a ⅛"-rad. bit at the router table (Fig. 1b). I left the other edges square, simply knocking off the sharp corners with sandpaper after the case was assembled later.

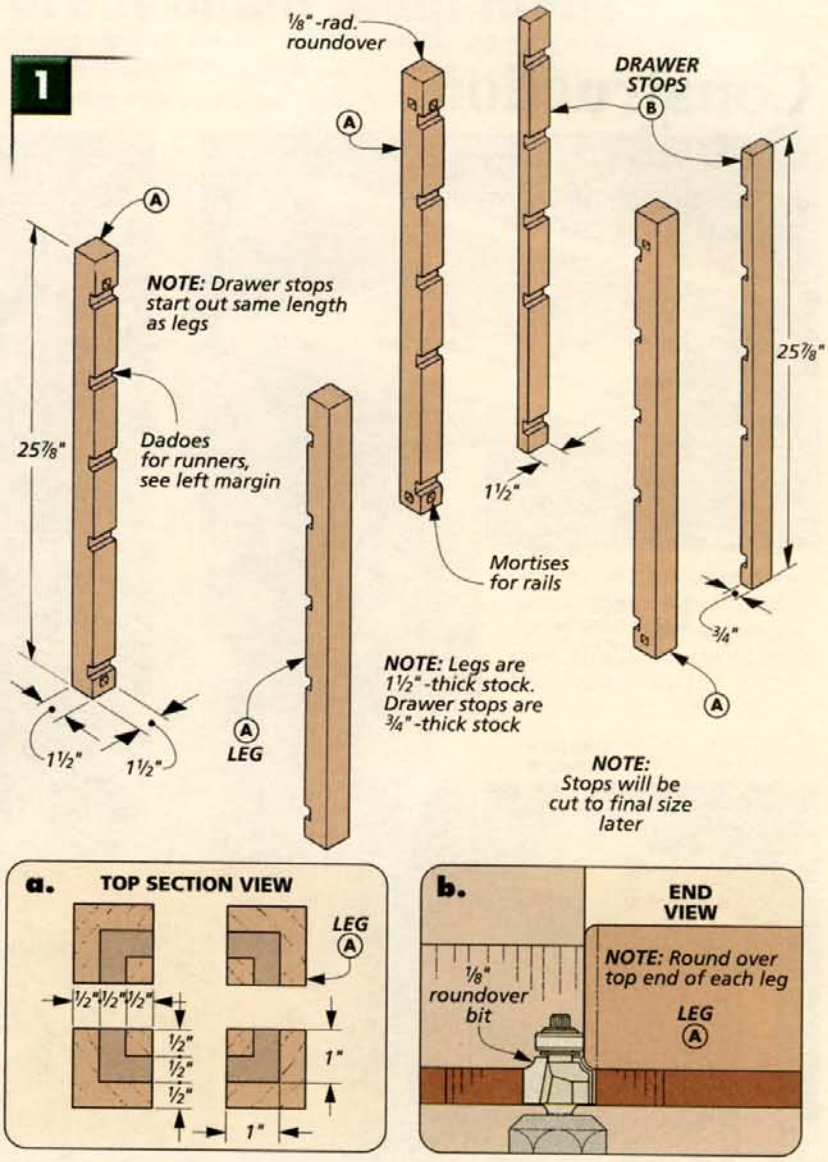

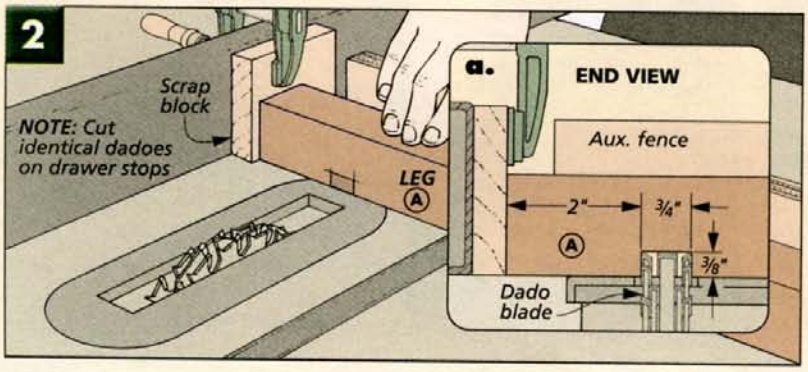

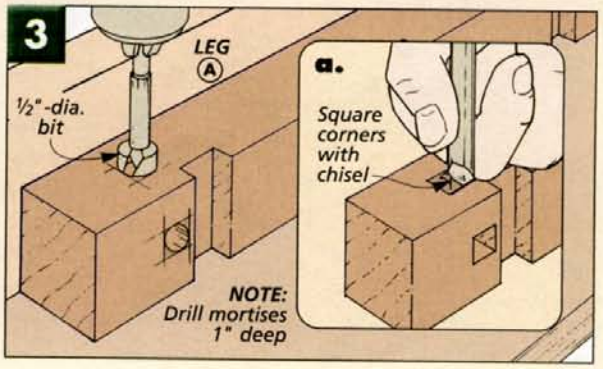

Side Rails

With the legs complete, the next parts to work on are the upper and lower *side rails (C)*, as shown in Fig. 4. Like the legs, these pieces are cut 1½" square from 8/4 stock.

TENONS. With the side rails cut to size, the first thing to do is create the 15/16"-long tenons that fit into the mortises on the legs, as shown in Fig. 4a. (I like tenons to be slightly shorter than the mortises so there's room for excess glue.)

What's nice about these tenons is that they have to be square to fit the mortises (½" x ½"), so one setup should work to cut both the cheeks and the top and bottom shoulders.

As you can see in Fig. 5, I did this at the table saw with the rails face down and an auxiliary miter gauge fence for support. Each face of the tenon can be cut in a couple passes over a dado blade with the rip fence providing a stop to create consistent shoulders (Fig. 5a).

RABBETS FOR RUNNERS. When you're satisfied with the fit of the tenons, leave the dado set in your table saw and bury it in an auxiliary fence so you can cut a rabbet along the inside edge of the rails, as shown in Fig. 6.

This rabbet will hold the drawer runners later, and you'll want the rabbet to align with the dadoes in the legs, as indicated in the margin at right. So I dry assembled the legs and rails and traced the outline of the dadoes on the rails. Then I snuck up on the size of the rabbet until they matched perfectly.

Before assembling the legs and side rails, the last step is to drill some oversized mounting holes for securing the top later, as in Fig. 4b. (These would be difficult to drill after the runners are added.)

ASSEMBLY. As with any assembly, you'll want to make sure the side frames here end up flat and square. And once you've applied the glue and positioned the clamps, there's one more step I would suggest you take. Using an old chisel, clean out the excess glue in the "open" mortises. This way, you won't have any trouble with the shorter tenons on the front and back rails fitting later.

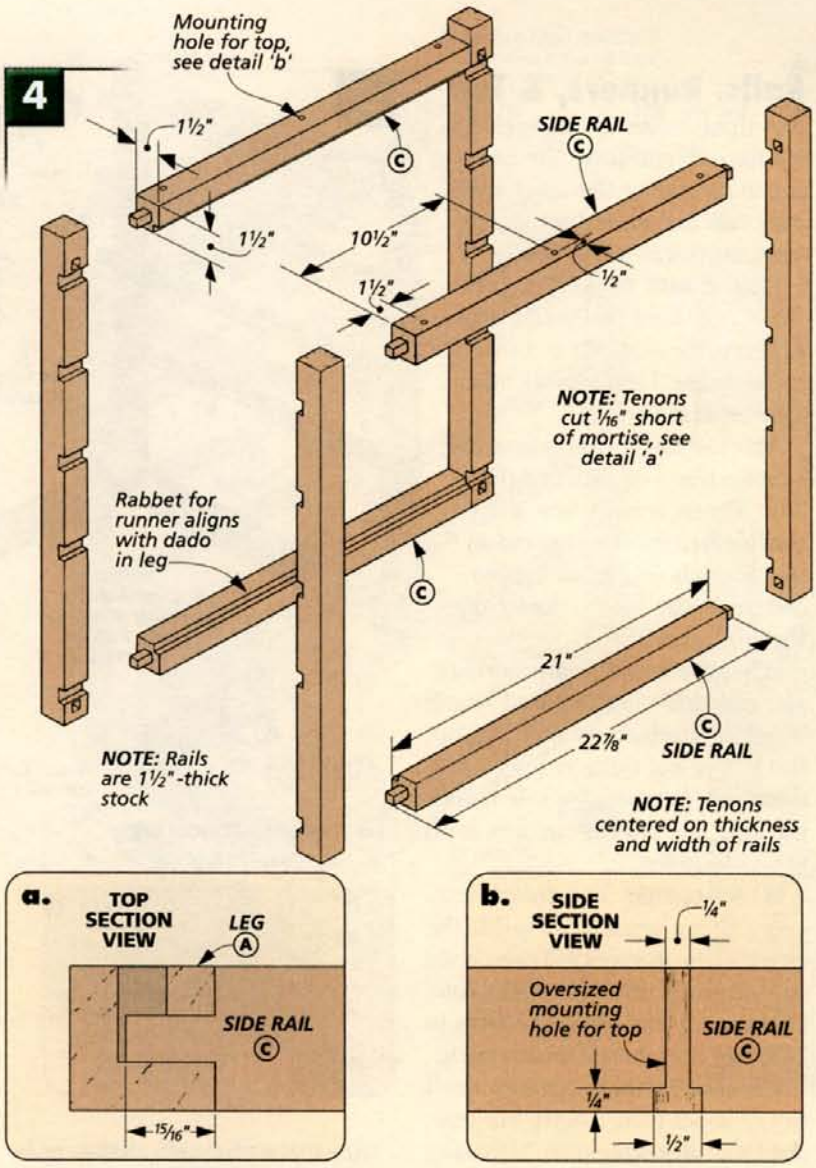

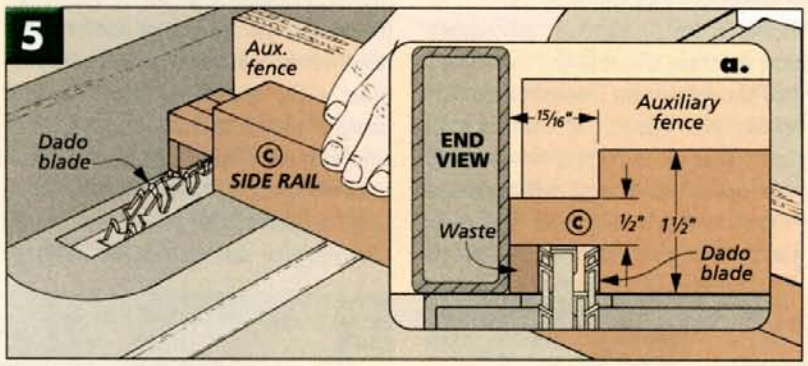

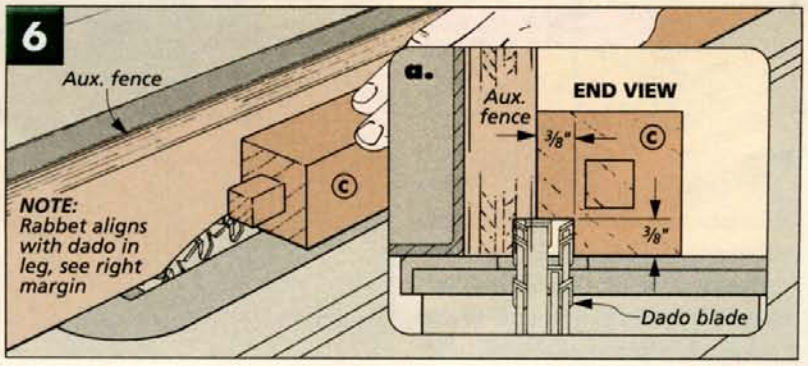

▲ *To create a channel for the drawer runners, the rabbet in each rail has to align with the dado in the leg.*

Rails, Runners, & Top

Now that the sides are assembled, it's time to complete the case frame by adding the front and back rails and some drawer runners, as you can see in Fig. 7.

FRONT & BACK RAILS. The four *front* and *back rails (D)* are similar to the side rails that were made earlier. They're just a little shorter, as in Fig. 7.

After cutting these rails to size, I cut the tenon on each end (Fig. 7b). These tenons are a bit shorter than the ones you cut on the side rails (7/16"), but the procedure is the same. (Refer to Fig. 5 on page 21.)

When the tenons fit the mortises, you can drill counterbored shank holes for attaching the top (Fig. 7a). But you're not quite ready to glue these rails between the side frames just yet. The drawer runners need to be added first.

DRAWER RUNNERS. The *drawer runners (E)* are small strips inside the case that the drawers will ride on. As you can see in the left margin photo, I cut mine from a piece of cherry to highlight how these drawers work.

When sizing these runners, don't worry about their length. For now, just focus on getting them to fit snug in the dadoes in the side frames, as shown in Fig. 7. And if you're planning to stain the wood to contrast with the case, you'll want to do this *before* you glue the runners in place. Just be sure you don't apply stain to the spots that will be glued to the frame, otherwise the glue won't stick. (See the photo below.)

▲ *The drawer runners are left extra long until they're glued into the side frames. Then they can be trimmed with a hand saw and sanded flush with the leg.*

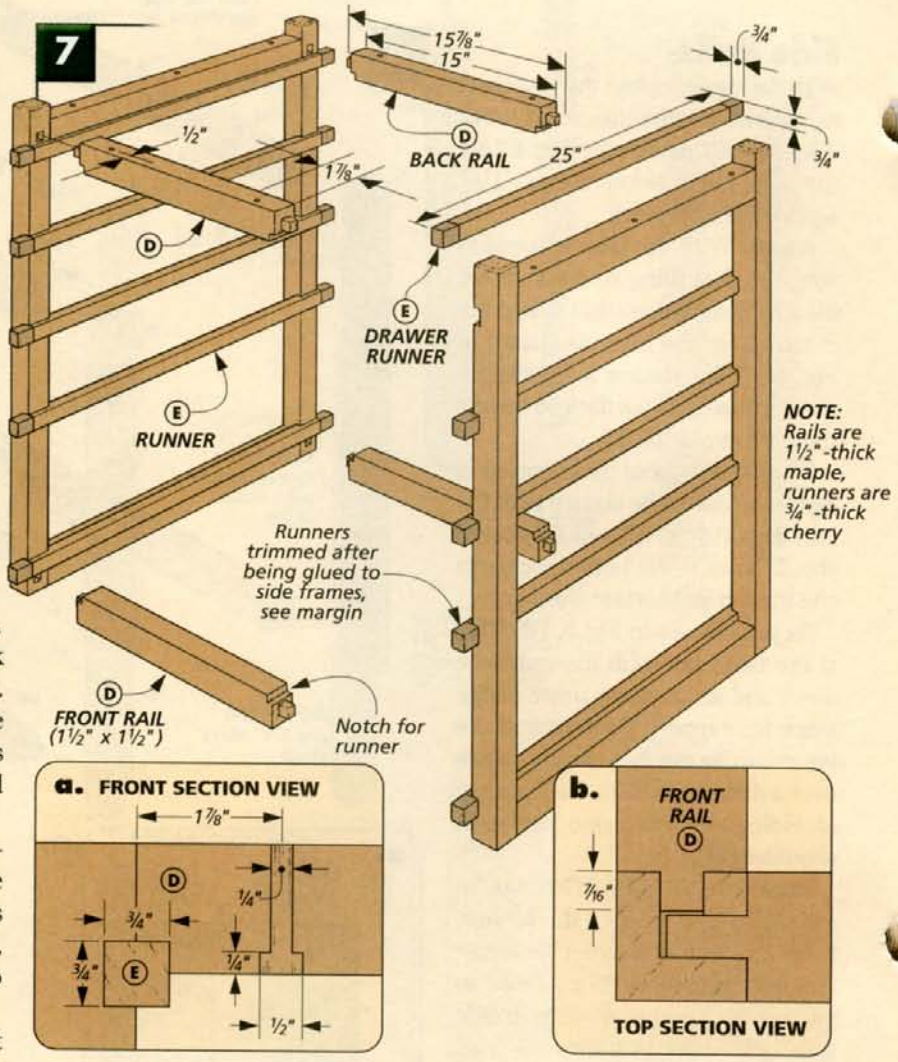

After the runners have been glued in place, they can be trimmed flush with the front and back of the case. Here, a hand saw will remove most of the excess, as shown in the margin photo at left. Then a little sanding will finish the job.

NOTCH RAILS. With the drawer runners in place, the front and back rails require one more step — they need to be notched to wrap around the drawer runners you just added, as you can see in Fig. 7a.

Like the dadoes and rabbets earlier, I cut this notch with a dado blade. To make the setup a little quicker and easier, I used a 1/4" hardboard stop block clamped to an auxiliary miter gauge fence. This thin stop allows the tenon to slide past the

▲ *Staining the runners will be easier if you do it before they're glued to the legs. Just be sure to tape off the areas where you need to apply glue.*

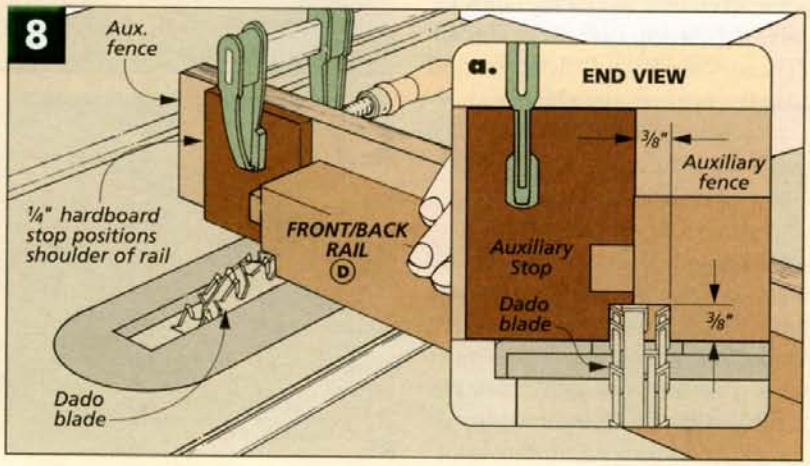

stop block, so you can reference the cut from the shoulder of the rail and sneak up on the right size of the notch more quickly. And as you're sizing the notches, test the fit of the rails in the side frames. Then when they fit without a gap, you can go ahead and glue the case together.

TOP PANEL. As the glue is drying, you can begin work on the top panel (Fig. 9). But there's more going on here than just gluing up a solid wood panel and cutting it to size. For one thing, each corner of the panel has to be notched to fit around the legs. Plus, I set the top on thin spacers to create a shadow line between the top and case.

The first thing to do is glue up a 3/4"-thick *top panel (F)*, and like the drawer runners, I used cherry for contrast (Fig. 9). When the panel has been planed or sanded flat, it can be cut to size to match the profile of the case (18" x 24").

With the panel cut to size, it's time to cut the notches that allow it to fit between the legs. This isn't all that tricky; the fit isn't meant to be tight. There's a 1/8" gap between the top and each leg, as shown in the photo at right. And the procedure can be done with one setup at the table saw (Fig. 10). Each corner is notched in two passes over a regular saw blade.

My biggest concern was supporting the large panel while these notches were being cut. But a tall auxiliary fence makes all the difference. And since these notches are square (1 5/8"), adding a stop block to the fence should let you cut all the notches with the same setup.

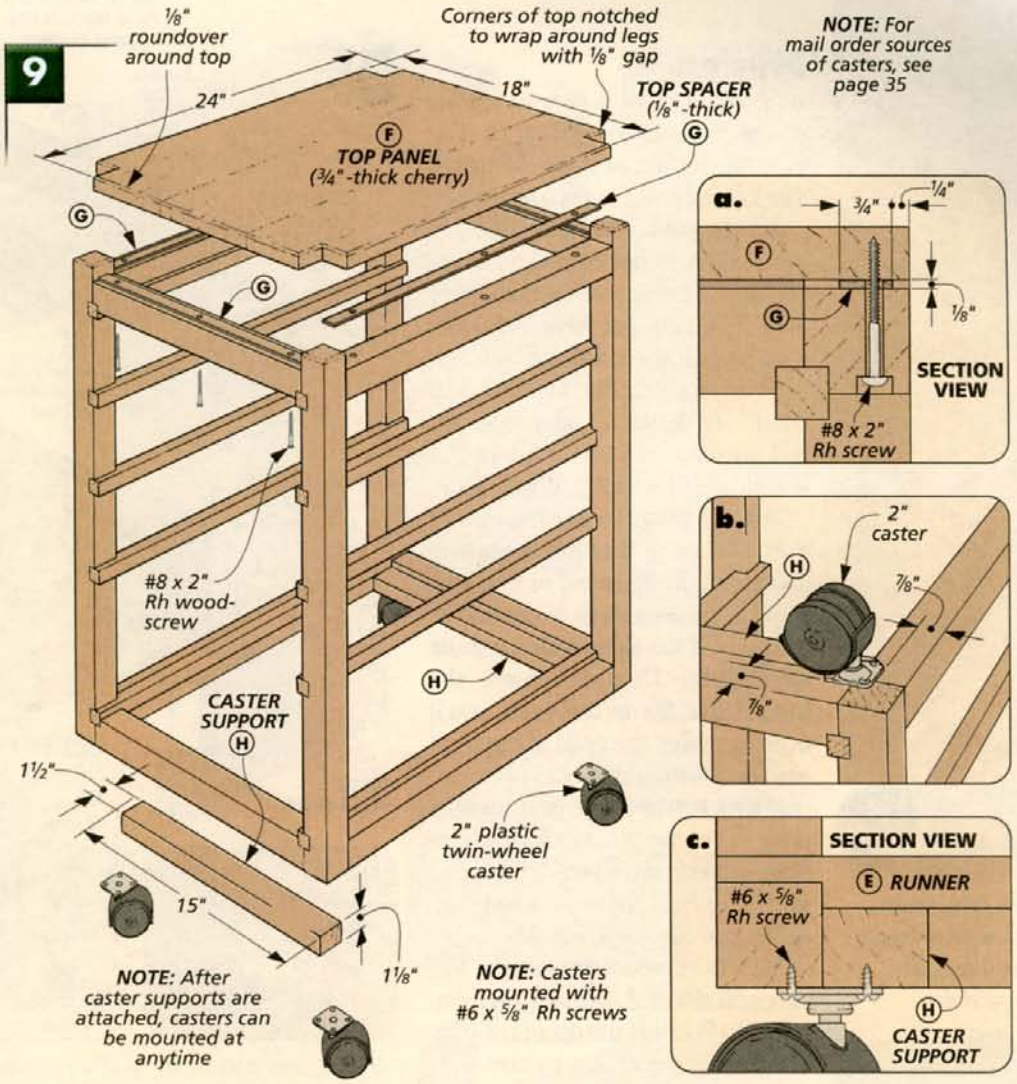

Of course, depending on your saw blade and the setup, the corner of the notch may need to be cleaned up a bit. But a chisel will make quick work of this (Fig. 10a).

SPACERS. Before screwing the top to the case, I added thin *top spacers (G)* to create a shadow line below it, as you can see in Fig. 9 and the margin photo at right.

To make these spacers, I started with 3/4"-thick stock and ripped several 1/8"-wide strips. (These strips really aren't visible, so you can use either maple or cherry to make them.) Then they're cut to length to fit between the legs.

Before you glue these pieces in place, you'll need to mark and drill the mounting holes for the top. And if you drill these holes oversized, you won't have to worry about lining them up exactly.

CASTERS. After the spacers have been glued in place and the top has been screwed to the case, all that's left is to add the casters, as shown in Fig. 9. If you prefer, you can wait to do this until after the drawers have been built, but for now, you can glue a couple of *caster supports (H)* to the bottom of the case. These pieces simply allow you to position the casters so their mounting plates don't stand proud of the case (Fig. 9a).

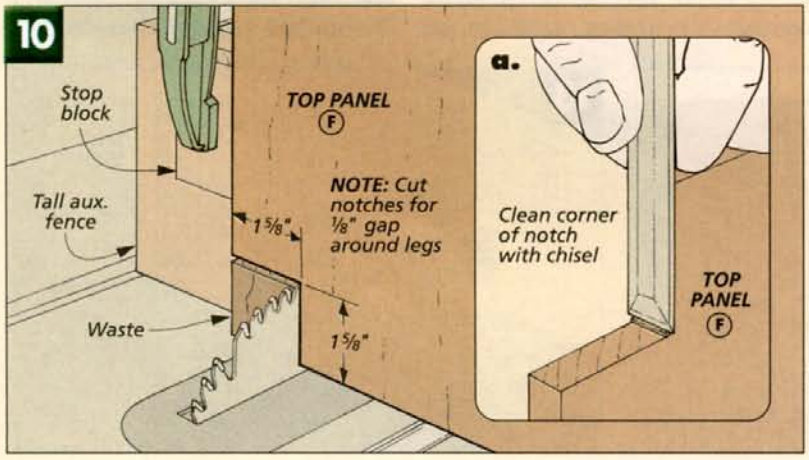

The top panel is notched to create a slight gap between it and the legs. This same clearance is created under the top with some thin spacers.

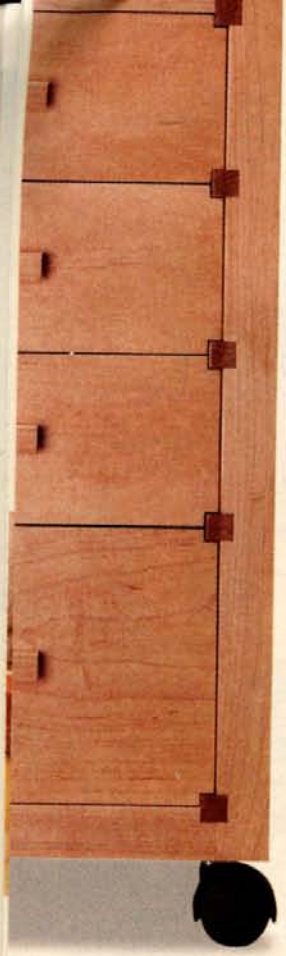

▲ *The false fronts are sized to create small gaps all around the drawers.*

Drawers

All that's left now is to work on the drawers, as shown in Fig. 11. The three upper drawers are identical. The lower drawer is just a bit deeper.

DRAWER PARTS. The four drawers are built to fit between the cherry runners. They'll rest on these runners (Fig. 11a), but there should be a 1/16" gap at the sides and top. And as you can see in Fig. 11, the *small fronts (I), backs (I)*, and *sides (J)* and the *large fronts (K), backs (K)*, and *sides (L)* are all 1/2"-thick stock.

TONGUE & DADO. To join the drawer parts, I used a simple tongue and dado joint, as indicated in Fig. 11b. First, a 1/4"-deep dado is cut across the ends of the sides with a regular saw blade. Then to create the tongue that fits in the dado, you'll need to rabbet the ends of the front and back drawer pieces.

DRAWER BOTTOMS. The next thing to do is to cut the grooves for the bottoms. Each piece gets a 1/4"-deep groove to hold these plywood panels, as you can see in Fig. 11c.

After the grooves are cut, the 1/4"-plywood *drawer bottoms (M)* can be cut to fit inside the openings (Fig. 11). Once they're cut to size, you can glue the drawers together.

FALSE FRONTS & BACKS. After a drawer is assembled, the first thing I like to do is to slide it into its opening. Here you'll notice right away that something is needed to guide the drawers in and out of the case. And with this cart, that something is the false back behind each drawer.

The 1/2"-thick *small (N)* and *large false backs (O)* are identical to the *false fronts (N, O)*, as shown in Fig. 11. Their lengths match the widths of the drawers (to create a 1/16" gap on each side), but they're taller, "wrapping" around the cherry runners above and below the drawers. To find this dimension, measure between the runners and add the height of one runner (3/4"). Then subtract 1/16" for the gap above the false front and back.

When the false fronts and backs have been cut to size, the first thing to do is cut the notches that fit around the runners, as shown in Fig. 12. These are sized so there's a 1/16" gap on each edge (Fig. 11a). And to do this, I used a dado blade and supported the pieces with an auxiliary fence.

Now before screwing the false fronts and backs to the drawers, I relieved both the top and bottom inside edges with a 1/4" chamfer, as shown in Figs. 11c and 13.

ADDING FALSE FRONTS & BACKS. When attaching false fronts (and backs), I like to drill a counterbore with a

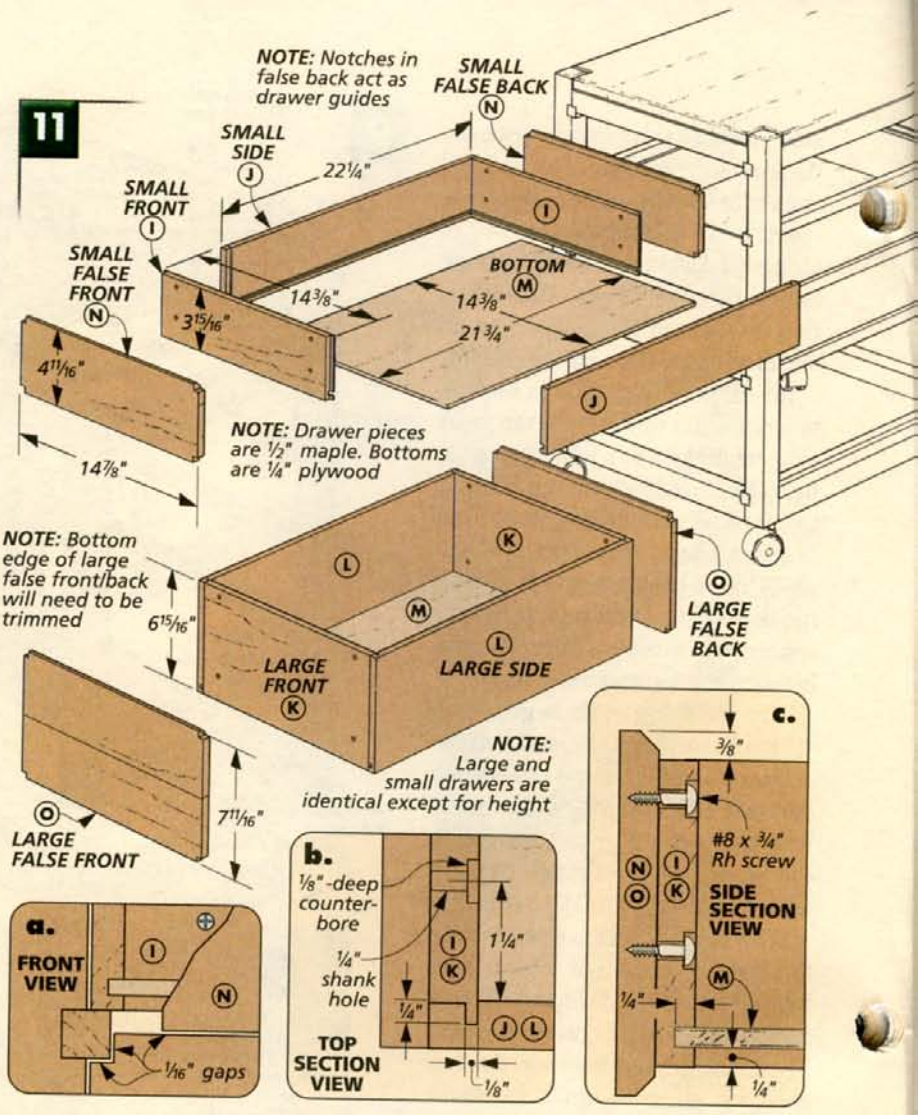

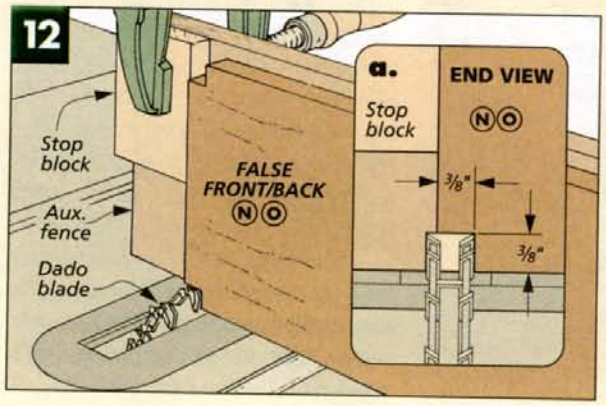

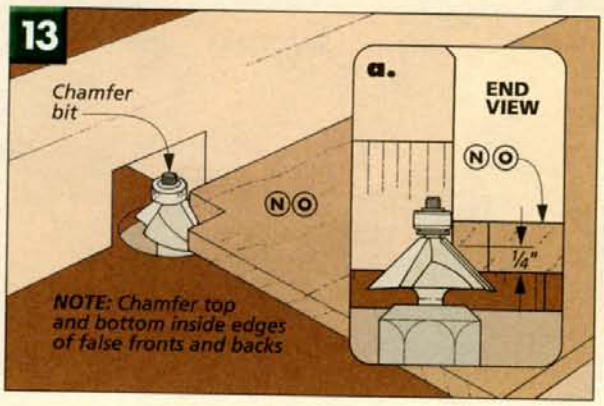

slightly oversized shank hole (Figs. 11b and 11c). This way, if I need to adjust the position of the false front, I can simply loosen the roundhead screws and shift the workpiece until the gaps are consistent all the way around the drawer.

Note: Before you add the false front and back for the bottom drawer, you'll want to trim off a bit from the bottom edge so you end up with a 1/16" gap at the bottom. Otherwise, the false front (and back) will rub against the rail in front.

DRAWER PULLS. There's still a little fitting to do for the drawers, but this will be easier to do if you add the pulls first. I didn't want hardware that would attract attention, so I made my own maple *pulls (P)*, as in Fig. 15. This is really easy to do. First, cut a rabbet along the edge of an oversized blank and rip it to width (see margin photo). Then cut the blank into 5"-long pulls.

FIT DRAWERS. When the pulls have been screwed to the false front, you can do a little final fitting on the drawers. My drawers wanted to catch on the leg at the back of the case and the runner at the front. So I filed back the notches on the front of the drawer (Fig. 14b) and chamfered the back edge of the drawer slightly (Fig. 14c).

DRAWER STOP. The last piece to add to this project is one of the first ones you worked on — the drawer stops (B), as shown in Fig. 14a. The dadoes that fit around the runners are already cut, but there are still a few things to do to these pieces before you can glue them in place.

First, you'll need to cut the stops to length to fit between the top and bottom, but with the dadoes already cut, you'll need to remove a little from each end of the stop.

Next, the stops need to be trimmed to final width. The goal here is to size them so that when the drawers butt against the stops, the fronts will be perfectly flush with the face of the case in front. (Mine ended up 3/4" wide.)

Finally, to "hide" the joint line between the stop and the case, I cut a small 1/16"-wide rabbet along the back edge of each, as indicated in Fig. 14c. Then I glued the stops to the back legs of the case. W

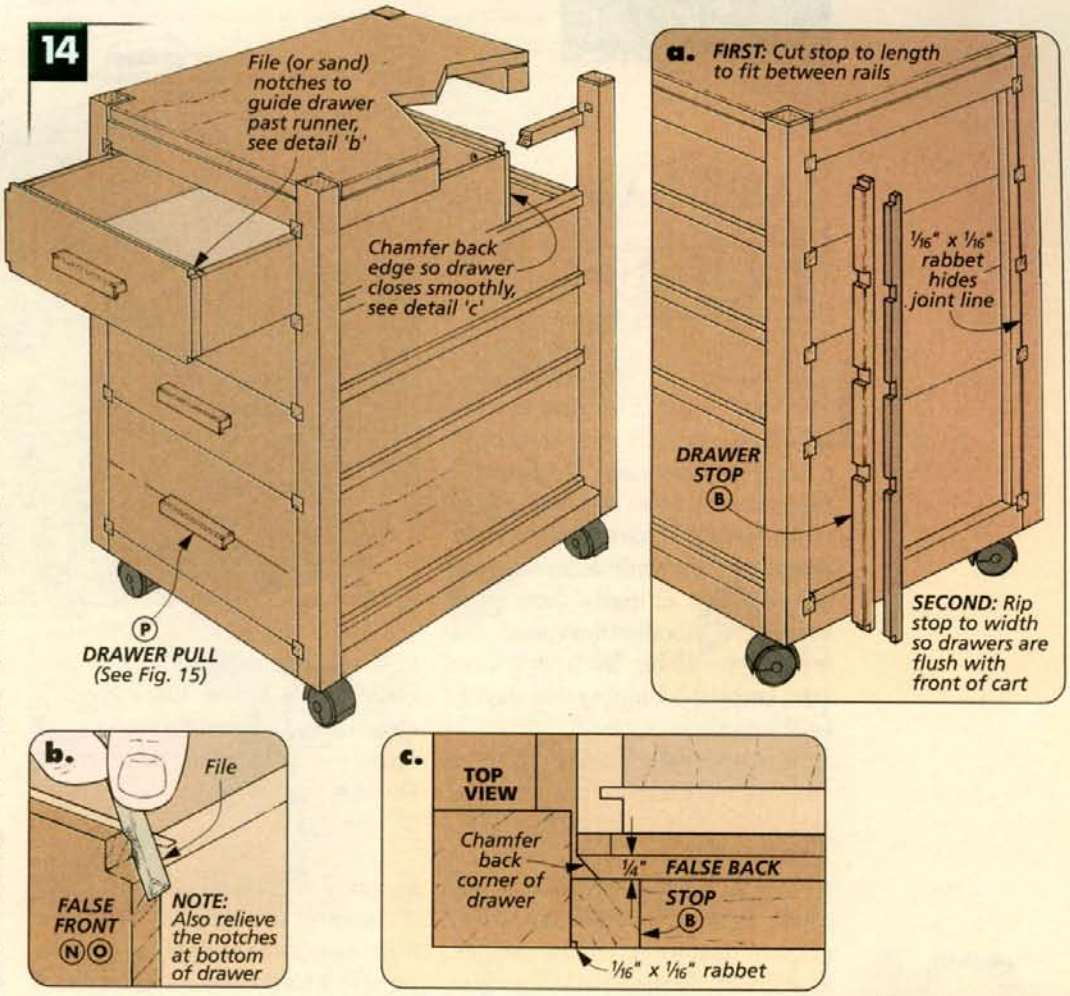

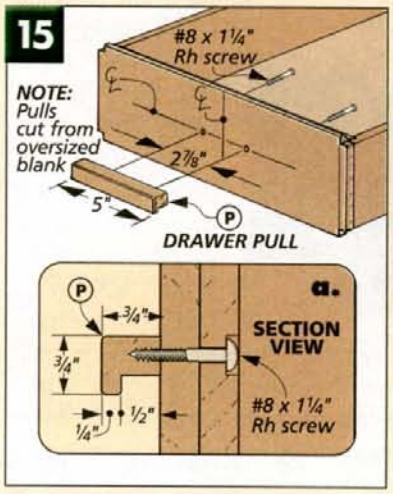

▲ *To make the pulls, it's safer to cut a rabbet on a wide blank before ripping the pulls to final width.*

CUTTING DIAGRAM

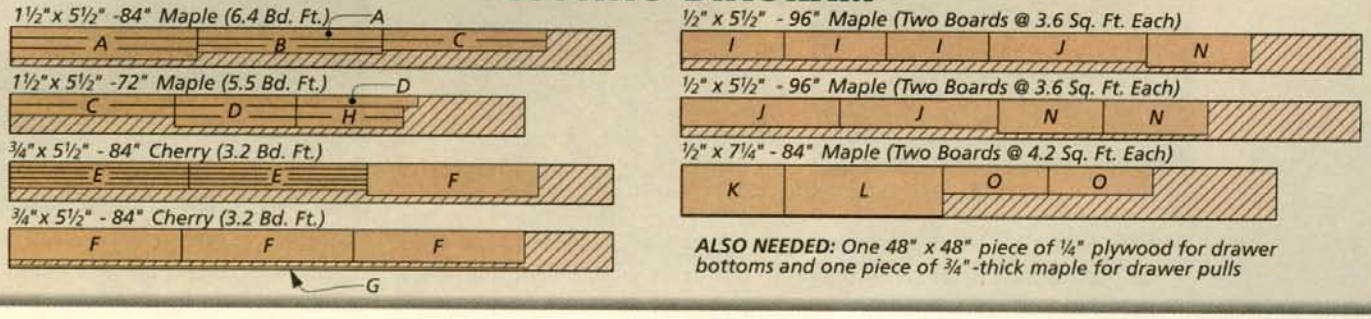

ALSO NEEDED: One 48" x 48" piece of 1/4" plywood for drawer bottoms and one piece of 3/4"-thick maple for drawer pulls

TABLE SAW TUNE-UP

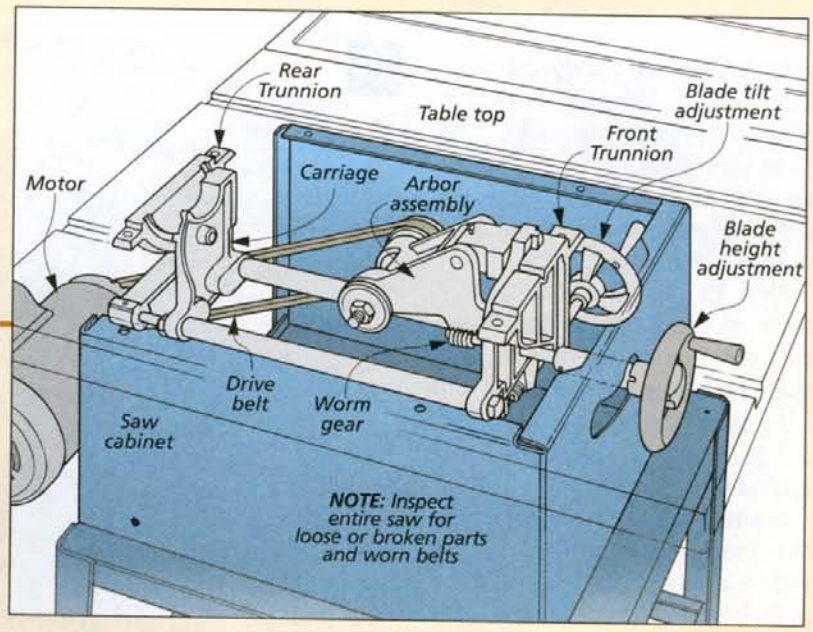

Let's face it, it's all too easy to use a tool day after day without much of a thought — especially a table saw. I forget how vital this shop workhorse really is until it starts making poor quality cuts, the controls become stiff and stubborn, or maybe there's just a little more vibration than usual. But bringing your table saw back to form (and keeping it running that way) is easy with a tune-up.

In many cases, tuning up your table saw might be nothing more than simply realigning the saw blade or rip fence. Even a quick cleaning and lubrication might be all it takes to return your table saw to like-new condition.

Regardless of what it might need, don't worry. The tune-up process isn't difficult. A few easy steps will get your table saw running smooth and strong again.

Clean Up

As in most tune-ups, the first step is a basic cleaning to remove any wood chips or dust from the saw cabinet. Start by vacuuming out as much as possible. Then use a few blasts of compressed air to take care of the rest (drawing at lower left).

One thing you may notice is that there's still some caked-on pitch. When this resin builds up on moving parts, it become difficult to operate the controls. So here's where some common shop solvents come in handy (see margin photo). Apply the solvent to soften the pitch and resin (see photo at right) so you can remove it easily with a stiff bristle or brass brush (drawing at lower right).

▲ *Ordinary shop solvents are all that's needed for cleaning stubborn pitch and resin build-up.*

When using solvents, pay special attention to *avoid* getting any on the arbor shaft or bearings. The solvent can penetrate the bearings and dissolve the lubricants in them. This can shorten the life of the bearings, resulting in an earlier than needed replacement.

TOP. Now that you've spent time cleaning the inside of the table saw, don't overlook cleaning the top. Although it's not likely to have caked-on pitch and resin, it can have a different kind of build-up — rust.

The most effective way to deal with this is to use fine grit (400 - 600) sandpaper or abrasive pads, like the ones shown below. I like to use mineral spirits as a lubricant and "wet sand" any area with rust on it.

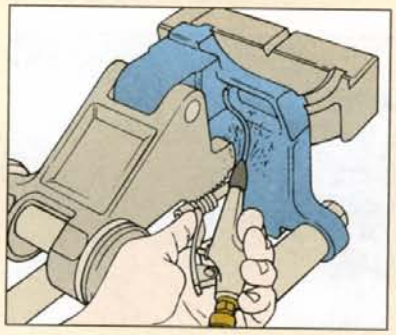

▲ *A few blasts from an air compressor will remove most of the loose chips and debris inside the saw cabinet.*

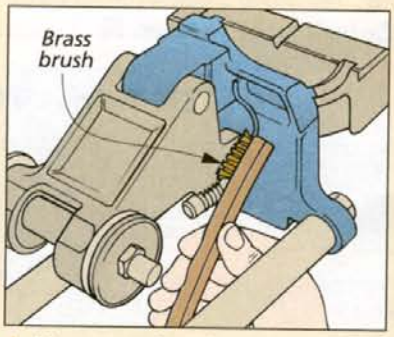

▲ *You can soften the caked-on pitch and resin with solvent and use a brass brush to "sweep" it away.*

▲ *Removing surface rust is quick and easy with a set of abrasive blocks that work like large erasers.*

Blade Alignment

No matter how clean and shiny your saw is at this point, it still won't make a smooth cut if the saw blade isn't properly aligned with the miter gauge slots. So it's a good idea to make a quick check of the blade.

To do this, all you need is a combination square, as shown in Fig. 1. Start by setting the body of the square so it rests against the inside edge of the miter slot and set the end of the square to contact a tooth on the blade. Now mark that tooth, rotate it, and then slide the square back to touch the same tooth.

If the blade is aligned, the tooth will touch the square just as it did before. But if it doesn't touch or the blade binds against the square, you'll need to align the saw blade. For a contractor's saw, this means adjusting the trunnions. (Cabinet saws are adjusted by shifting the table.)

ADJUST TRUNNIONS. The front and rear trunnions are bolted to the underside of the table and support the carriage and arbor assembly (see drawing at left).

Adjusting the trunnions is simply a matter of loosening the bolts that hold them in place and shifting them to bring the saw blade into alignment. But before you do this, it helps to remove the drive belt and motor. Besides reducing any excess weight, it also makes it easier to reach the trunnion bolts (Fig. 2).

Now you're ready to adjust the trunnions. The trick here is to not loosen the bolts too much. They should be just loose enough that you can tap each trunnion into alignment with a piece of scrap and a mallet (Fig. 3). If they're too loose, the trunnion could move as you retighten the bolts. Note: Recheck the blade alignment as you did before to make sure the adjustment is correct.

ALIGN PULLEY. Now that the blade is aligned, you can reinstall the motor and belt. But to make sure your saw will run smooth and vibration-free, you'll have to check the alignment of the motor and arbor pulleys.

To do this, all you need is a straightedge. Place one edge so it rests on the outside face of both pulleys, as shown in Fig. 4.

What you want is for the face of each pulley to rest flush against the straightedge. If they don't, there are a couple of adjustments that can be made. First check the pulley on the motor. It can easily be moved in or out on the motor shaft. Second is adjusting the whole motor plate. This is done by loosening the bolts shown in Fig.4a.

CHECK BELT. Finally, give the drive belt a quick check. If it's worn, cracked, or frayed, you might want to consider upgrading to a link-belt (see photo below).

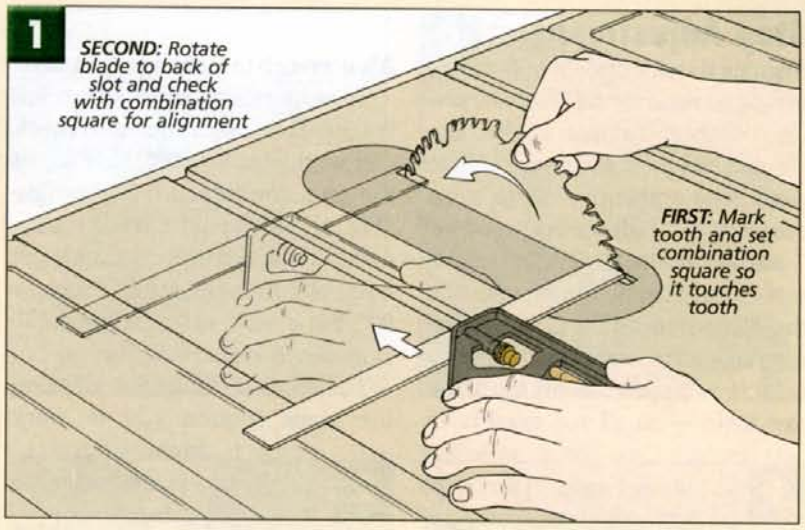

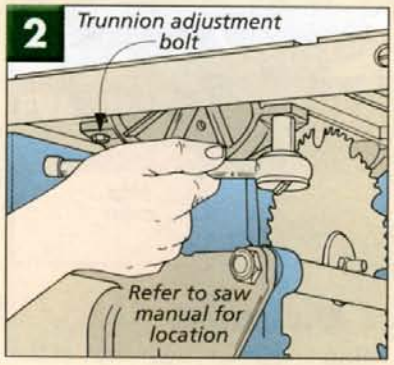

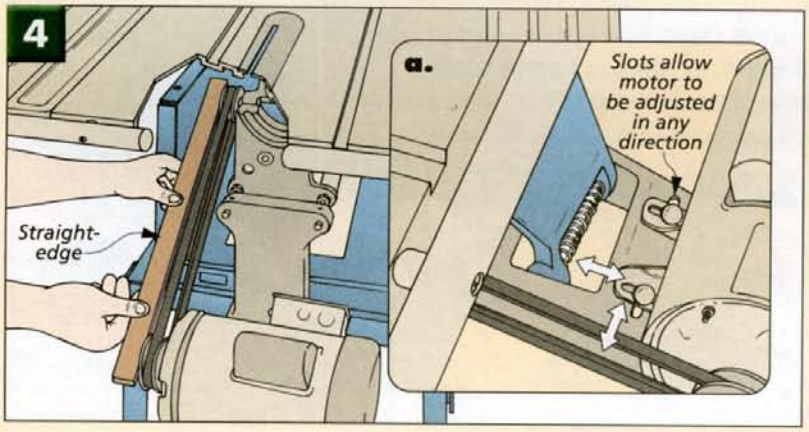

▲ *Aftermarket "link" belts can be custom fit to any tool and offer increased performance and reduced vibration.*

Stop Adjustment

Aligning the saw blade is only part of getting an accurate cut. To make precise bevels at common angles, like 45° and 90°, most saws have built-in stops. The problem is, these stops can move out of adjustment over time.

MAKING ADJUSTMENTS. There are several different methods for adjusting the stops depending on the table saw model. The easiest method uses set screws tapped into the top of the saw table — so all you need is an Allen wrench to make an adjustment.

Start by raising the blade to full height. Then use a square to check and set the blade to 90°. Now adjust the set screw to match that setting (Fig. 1). Once you've set the stop, make a quick check by tilting the blade and then returning it back to 90°. For a table saw that has a 45° stop, simply repeat the process.

The other methods for adjusting the stops require you to work underneath the saw table. Here again, depending on your saw model, you're likely to see different systems. The two most common types include a stop collar adjustment or a set screw and nut, as illustrated in Figs. 2 and 3.

Even though the stops are different, the steps for making the adjustments are identical. Simply set the saw blade, make your adjustment to the stop, and then recheck the blade.

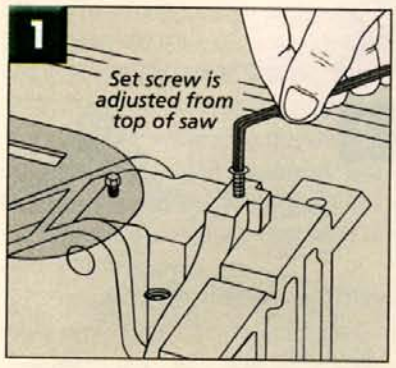

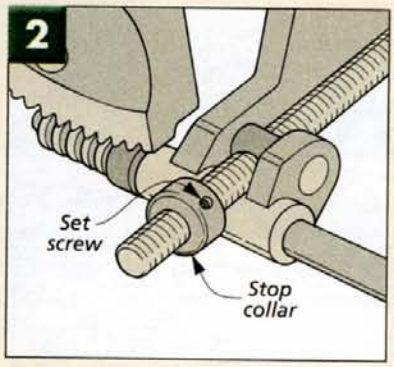

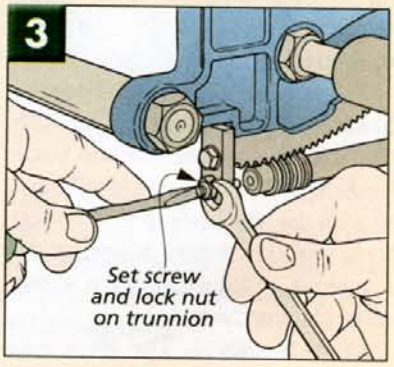

Rip Fence and Miter Gauge Alignment

Now that the stops are adjusted and aligned, it's time to focus on adjusting the two most important accessories you can use with your table saw — the rip fence and miter gauge.

RIP FENCE. When it comes to cutting a board to width, an accurately aligned rip fence is critical. If it isn't, a number of things can occur.

For starters, you'll end up cutting a wider kerf than necessary. This puts a heavier load on the motor, and requires more effort to push a workpiece through the saw blade. It can also produce a rough or burnt edge, or even result in kick-back.

TESTING. Before making any adjustments, check to see if the fence is aligned properly. Just like checking the alignment of the saw blade, I use a combination square and the miter slot to check the alignment of the rip fence, as shown in Fig. 1.

Here again, the distance from the front edge of the fence to the miter slot should be the same as the back edge. If it isn't, you'll need to make an adjustment to the rip fence.

ADJUSTMENT. As you may have already guessed, there can be several different ways to adjust the alignment of the rip fence. For specific instructions, it's best to consult your owner's manual.

Some rip fences have set screws on the fence base (see margin photo), while others involve the fence itself (Fig. 1a). Regardless, the goal is to have the fence parallel to the blade.

MITER GAUGE. Just as important as the rip fence, the miter gauge needs to be aligned properly for crosscuts.

The first thing to check is that the miter gauge fits in the slot without any play. To tighten up a loose fit, dimple the sides of the miter gauge bar until it slides smoothly back and forth, as you can see in Fig. 2.

Then I use a plastic triangle to set the stops for the 45° and 90° settings on the miter gauge (Fig. 3). After aligning the head with the saw blade, adjust the stops to match.

▲ *Many popular fences have easy to adjust set screws on the base to align the fence.*

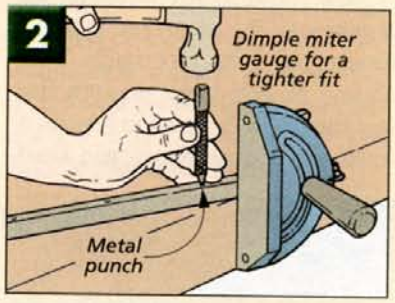

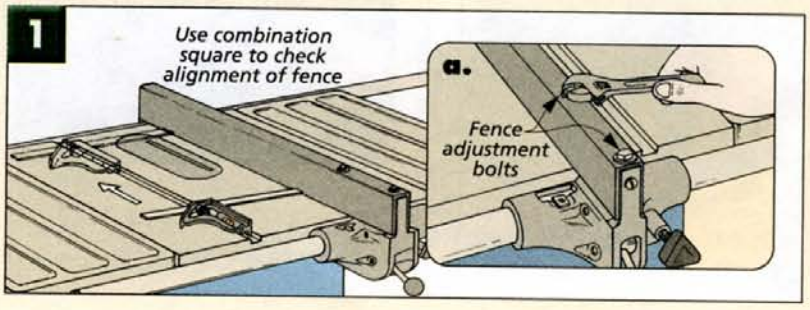

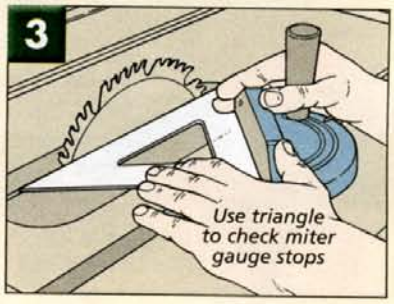

Top Alignment

The final step in a tune-up is to "align" the entire working surface of the table saw. This is just a matter of leveling the throat insert and extension wings to the saw table.

INSERT. To prevent the workpiece from catching as you make a cut, the insert needs to be flush with the saw table. In addition, it should be stable so it doesn't rock back and forth as a workpiece slides over it.

On most saws this adjustment is made using four set screws located in the insert, as shown in Fig. 1. To check your adjustment, a straightedge placed across the saw table should be flat against the insert.

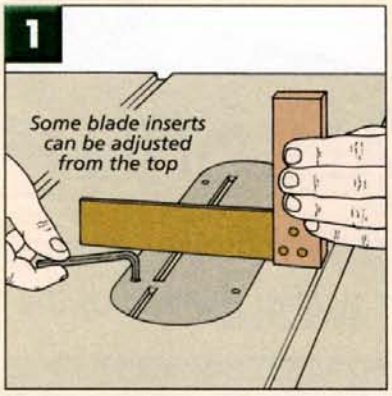

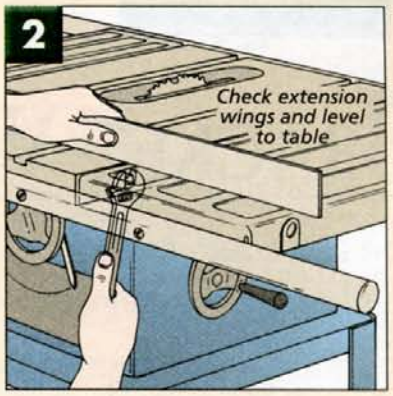

EXTENSION WINGS. Leveling the extensions wings isn't all that different than adjusting the insert. You'll just need a longer straightedge.

This time, lay the straightedge so half rests on the saw table and the other half rests on the wing (Fig. 2). If the wing needs adjustment, loosen the bolts underneath, shift the top, and then retighten the bolts. W

PREVENTIVE MAINTENANCE

Even if everything is perfectly aligned, you may still find the controls on the saw a little hard to turn or operate. This is a sign that things need a little lubrication.

But you don't want to use just any type of lubricant. Petroleum-based greases and oils attract sawdust and wood chips like a magnet.

DRY LUBRICANTS. To keep the moving parts from caking up again, I try to use a dry lubricant like graphite or paste wax in as many areas as I can. They're less likely to attract dust and chips.

The drawing at right shows the areas that should be lubricated on a regular basis. Note: For table saws exposed to low temperatures (like in a garage), try lubricating internal parts with white lithium grease.

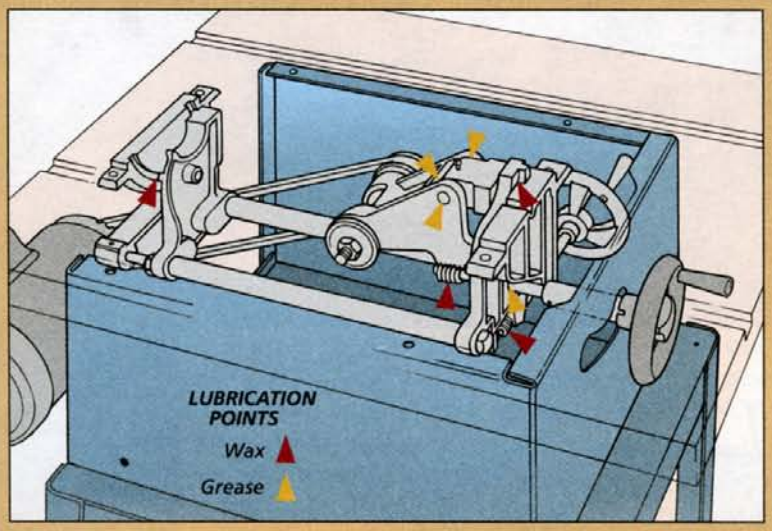

PROTECT THE TOP. The inside of the table saw isn't the only area that needs lubrication and protection — so does the top. There are a couple basic steps I follow for maintaining a cast iron table top: remove the rust and dirt (refer to page 26) and then seal it with a protective top coat.

Sealing the surface isn't a lot of work (see photo at right), but it pays off in the long run. Besides protecting it from rust, it also lubricates the working area. This makes it easier to slide workpieces across the top as you work.

▲ *Protecting a cast iron top from rust is a constant battle. Silicon-free aerosols like TopCote (shown above) or ordinary paste wax are one way to do this without contaminating a workpiece.*

BRACKET WALL SHELF

You can easily build this shelf to whatever length you need and have it hanging on your wall at the end of the weekend.

When you get right down to it, a shelf requires only a couple of brackets screwed into wall studs and a board to span them. But if the studs aren't exactly where you want your brackets to be, do you just live with the shelf being not quite where you wanted?

With this project, I found a way around that predicament. The brackets aren't screwed to the wall at all. Instead they're fastened to a long wall plate. Then you can position the wall plate exactly where you need it and screw into the studs wherever they happen to be.

GROOVES. But if you look at the main photo, you may realize that you don't see any screws. That's because they're driven into a groove in the wall plate. When the shelf is put in place, it hides the screws. (The groove also traps the back edge of the shelf, locking it in place.)

There's also a groove in the shelf, as shown in the inset photo. Although its main purpose is to hold plates upright for display (see the photo on page 32), it also hides the screws that secure the shelf to the brackets.

OPTIONS. It's easy to customize this project by changing its length or the depth of the shelf. And for a look different from the Craftsman version shown here, a painted Colonial version is shown on page 33.

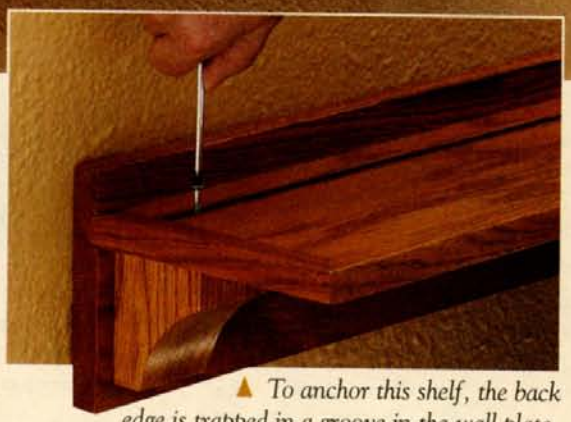

▲ *To anchor this shelf, the back edge is trapped in a groove in the wall plate, and then it's pinned in place with a couple screws.*

MATERIALS

A	Wall Plate (1)	3/4 x 5 1/2 - 51 1/2
B	Brackets (3)	2 1/4 x 2 1/2 - 3 1/8
C	Shelf Supports (2)	3/4 x 2 1/4 - 21 3/4
D	Shelf (1)	3/4 ply. - 6 1/4 x 50
E	Plate Groove Inlay (1)	3/4 x 1/4 - 50
F	Edging	3/4 x 3/4 - 70 In. in.

SUPPLIES

- (3) #8 x 1" Fh Woodscrews
- (10) #8 x 1 1/4" Fh Woodscrews
- (4) #8 x 2 1/2" Fh Woodscrews

Note: Parts listed are for Craftsman shelf.

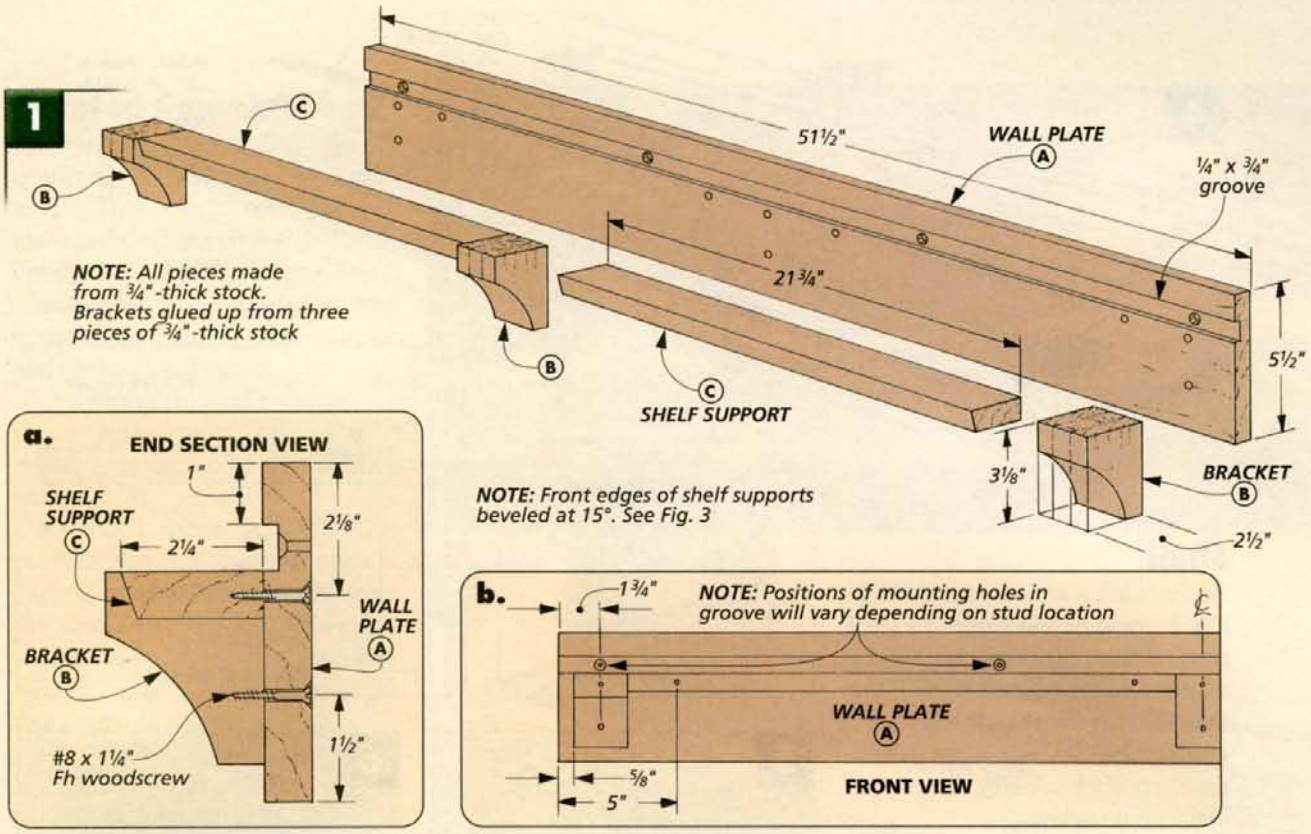

Mounting System

Before you can start building the shelf, you need to decide how long you want it to be. (Mine was 51½".)

WALL PLATE. As Fig. 1 shows, the "foundation" of the project is the *wall plate (A)*. All the other pieces of the project are connected to it, so I cut this piece to size first.

The wall plate has a ¼"-deep groove cut down its length to accept the shelf. The back edge of the shelf will be trapped in the groove so the shelf won't flip up if something is placed along its front edge. I found it easiest to cut the groove with a dado blade in the table saw.

Later, shelf supports and brackets will be screwed to the wall plate. So before moving on, I drilled countersunk shank holes for these pieces, as shown in Figs. 1a and 1b. Note: My brackets were positioned 24" on center, but you may want to adjust this spacing to fit your shelf.

BRACKETS. Now it's on to the pieces that hold the shelf up — the brackets and shelf supports.

I started on the *brackets (B)* by gluing up blanks from three pieces of ¾" stock, as you can see in Fig. 2. Since it's tough to get the edges of the pieces to align perfectly, I used oversized pieces. Once the glue is dry, the three blanks can be cut to final width (2½") and length (3⅛").

A quick way to lay out the arc on each blank is to make a posterboard pattern, like you see in Fig. 2. After the arc is laid out, the shape can be rough cut on the band saw. I used a drum sander to sand up to the lines.

SHELF SUPPORTS. The next thing to do is to cut the *shelf supports (C)* to width and to rough length from ¾" stock. If you look at Fig. 3, you can see that one edge has a 15° bevel.

Now the brackets can be glued and screwed to the wall plate. To position them perfectly flush with the dado, I used a scrap of plywood, as shown in the photo below.

Finally, the shelf supports can be cut to fit between the brackets before screwing them in place.

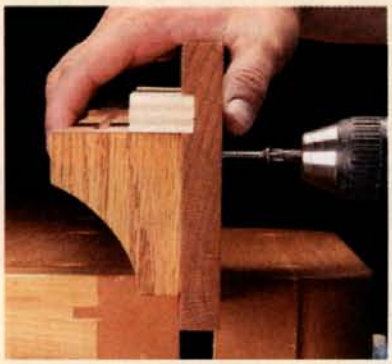

◄ *A piece of scrap plywood in the groove in the wall plate will help keep the shelf supports and brackets in position while you drill pilot holes and drive the screws.*

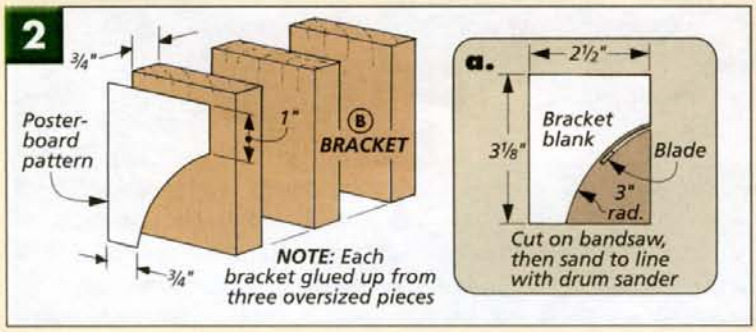

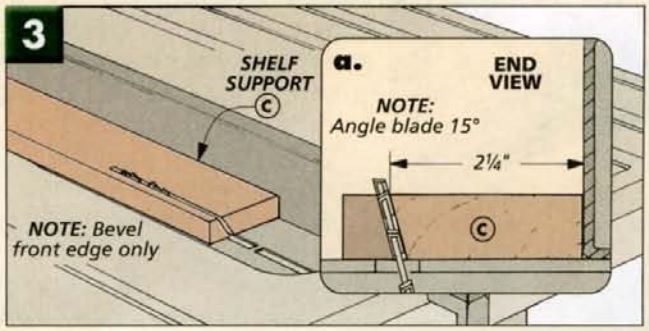

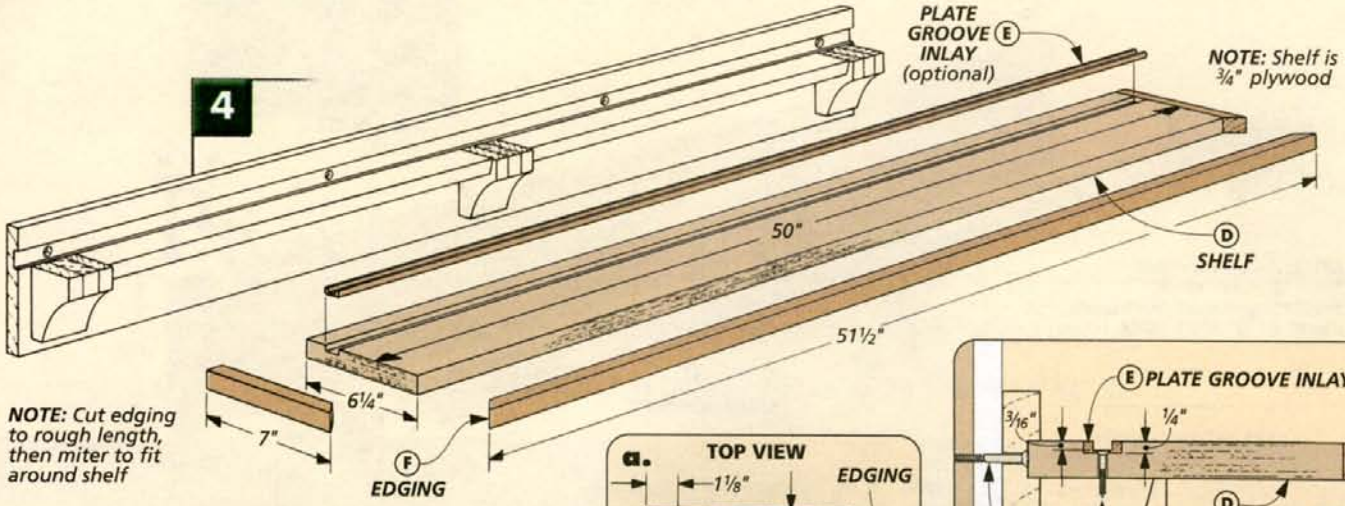

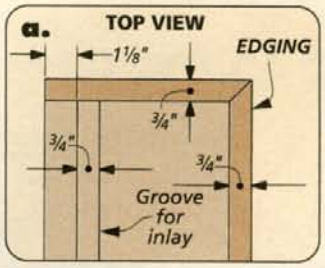

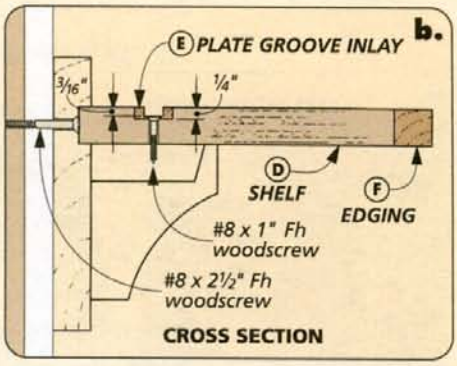

Shelf

All that's left is to make the shelf. So that it would be less likely to warp, I made it from plywood and hid the exposed edges with hardwood. But first, you may want to add an optional groove near the back edge to hold plates upright for display, like you see in the photo below.

SHELF. Construction of the shelf starts off like that of the wall plate. First, the *shelf (D)* is cut to size (Fig. 4). Next, I wanted to cut a groove down its length for the plate groove, but this would have left the plywood layers exposed. My solution was to insert a solid wood *plate groove inlay (E)*, as you can see in Figs. 4 and 4b. There's more about doing this in the box below.

EDGING. The next thing to do is make some edging to wrap three sides of the shelf. The *edging (F)* is ¾" wide (Fig. 4a). I cut mine slightly thicker than the shelf so I could plane it flush after gluing it in place.

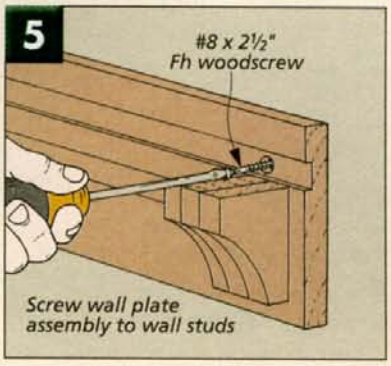

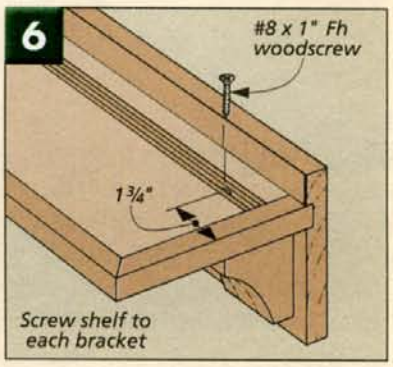

Before hanging the shelf, I applied a finish. More details about this are on page 35.

HANGING. Fastening the shelf to the wall is as easy as finding the studs where you want the shelf to hang. Mark their location in the groove in the wall plate and drill shank holes at these locations, as shown in Fig. 5.

Finally, after the wall plate is screwed to the wall, you can place the shelf on the brackets with its back edge in the groove in the wall plate. It's held in place with a screw into each bracket (Fig. 6).

PLATE GROOVE INLAY

After cutting the groove in the shelf for the optional plate groove, you need a way to hide the plywood layers. I simply glued in a solid wood inlay, then cut a groove in the inlay, as shown in the steps at right.

After gluing the inlay into the groove, it may be necessary to plane or sand the ends and top to bring the inlay flush with the surfaces of the shelf.

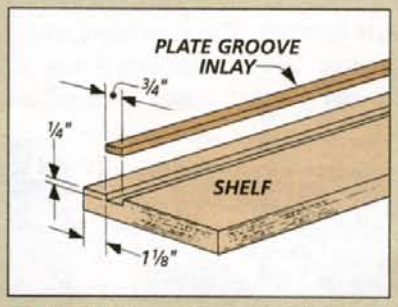

1 *The first step is to cut a ¼"-deep groove in the shelf. Then cut a piece of hardwood to fit the groove and glue it in place.*

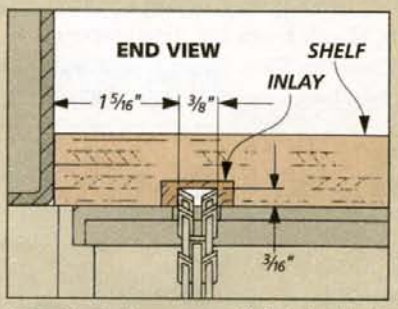

2 *Next, change to a ⅜" dado blade and raise it 3/16" above the table. Then position the table saw rip fence to center the groove on the inlay.*

Painted Colonial Shelf

Like the Craftsman shelf, the design of this shelf makes it easy to customize. This Colonial version shares many of the construction techniques, but there are a few variations.

MATERIALS. Since this shelf was going to be painted, I used poplar and also a ready-made pine cove molding that can be found at most home centers. These materials are inexpensive, easy to work with, and take paint well.

WALL PLATE. If you look at Fig. 1, you can see that the wall plate is slightly longer than the wall plate on the Craftsman version. The extra length allows for a roundover with a shoulder that's routed around all four edges as shown in Fig. 2.

Once the roundover is completed, you can cut the groove for the shelf.

BRACKETS & SUPPORT. The profile cut in each bracket is a modified ogee. Don't worry — the cuts can be made on the table saw and band saw. A pattern and all the details about doing this are on page 16.

Since there are just two brackets (one at each end), you'll need only one shelf support to go between them (Fig. 1). After this piece is cut to size, a roundover to match the profile of the wall plate is routed along the front edge (Fig. 1a). Once the shank and pilot holes are drilled (Fig. 1b), the brackets and support can be screwed in place.

MOLDINGS. A close look at Fig. 1a shows that the profile of the brackets is repeated on a smaller scale by the roundover on the shelf support and two moldings below it. The two moldings are just a piece of cove molding and a thin filler strip.

The filler strip can be cut to size and glued to the wall plate like you see in Fig. 1a. Then a length of 1¼" cove molding can be cut to fit between the brackets and glued in place under the shelf support.

SHELF. The shelf, plate groove inlay, and edging are all identical in size to the Craftsman shelf shown on the previous page. The length of the shelf with the edging should match the shoulder to shoulder measurement of the wall plate. W

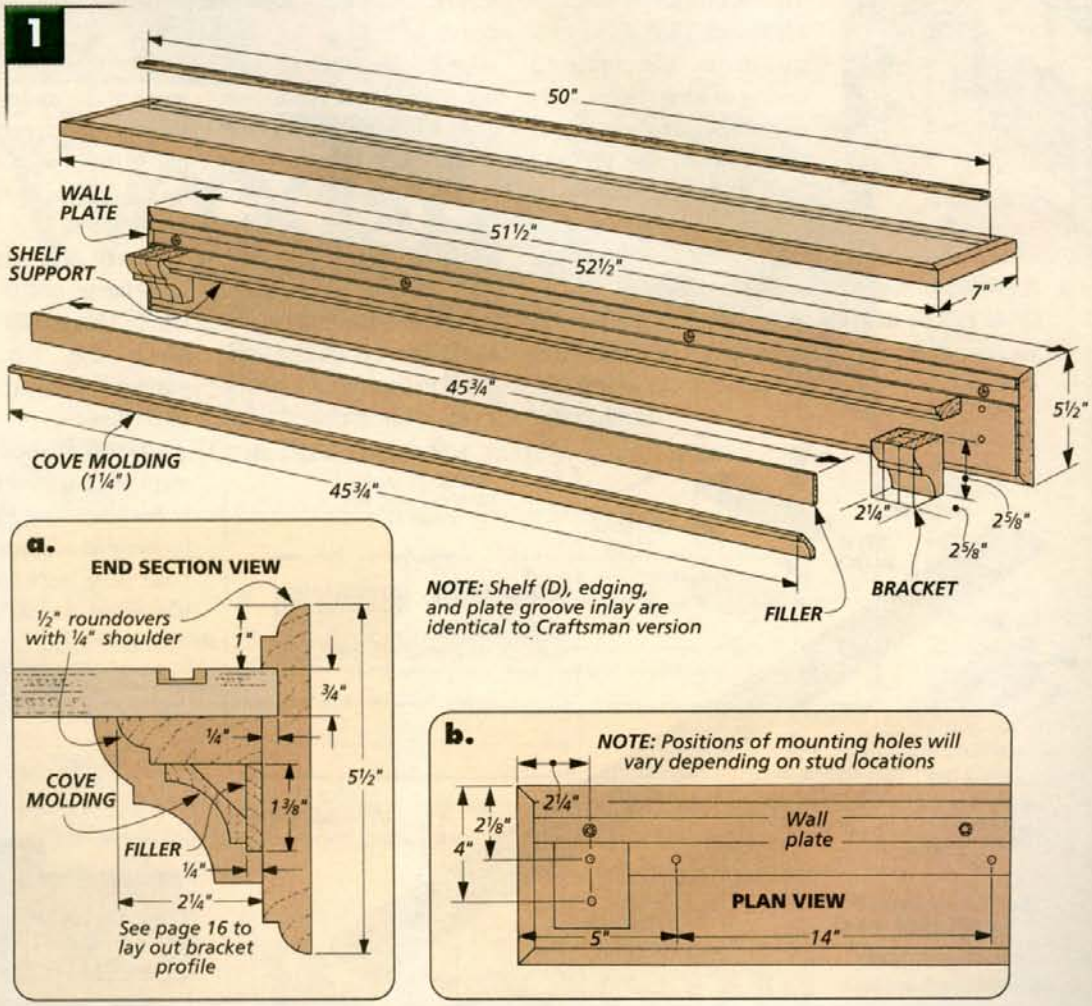

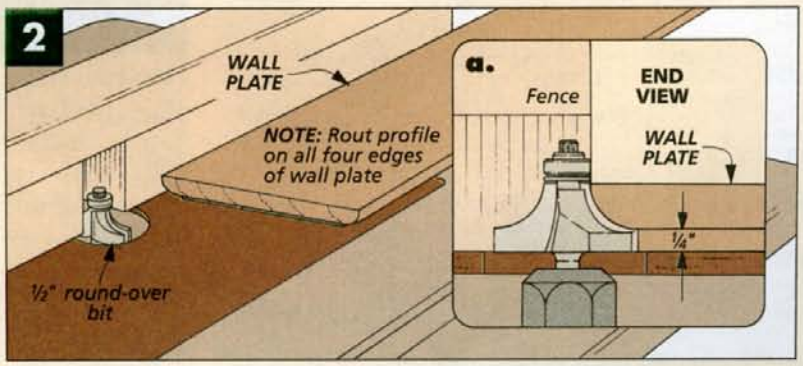

DADO JIG

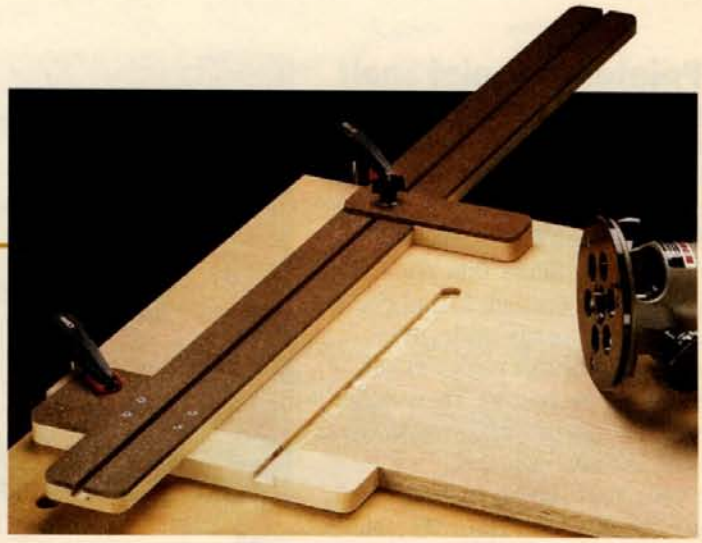

Recently, Steve Barnes, a reader from Gainesville, Florida, sent us an idea for a routing jig that makes aligning and routing stopped (and through) dadoes quick and easy.

T-SQUARE. The jig is just a shop-made T-square consisting of three basic parts — a fence for the base of the router to ride along, a cleat that keeps the fence square to the workpiece and a built-in, adjustable stop, see drawing.

The fence is made from a long piece of stock. First a groove is cut along the length of the fence and a piece of hardboard is added to one side. Now a T-track can be formed by cutting a centered slot in the top edge of the fence to hold the stop block. Note: See page 17 for details on how to make the T-track.

The thing I liked most about this jig is the squaring cleat. It helps register the jig so it stays square with the edge of the workpiece. A clamp pad, glued to the cleat, provides a place for a clamp so it won't interfere with the fence or the router. Plus, an indicator notch on the other end of the cleat lets you line up the jig exactly with your layout lines.

Finally, add a knob and toilet flange bolt to the stop block. This will let you lock down the T-track for stopped dadoes, see the photo above.

ASSEMBLY. To build the jig, start by clamping the cleat to the fence (using a square to keep it aligned). Take your time here to ensure it's clamped at 90°.

With the two pieces still clamped, simply drill and screw the fence to the cleat and then attach the clamp pad with glue.

The idea is to make sure that everything stays square, ensuring you end up with an accurate jig.

SETUP. The first time the jig is used, the bit will cut an indicator notch, as shown in the margin photo. Then, when using the jig, line up the notch and clamp it at both ends.

To rout through dadoes, just remove the stop. W

▲ *An indicator notch shows exactly where the cut will be.*

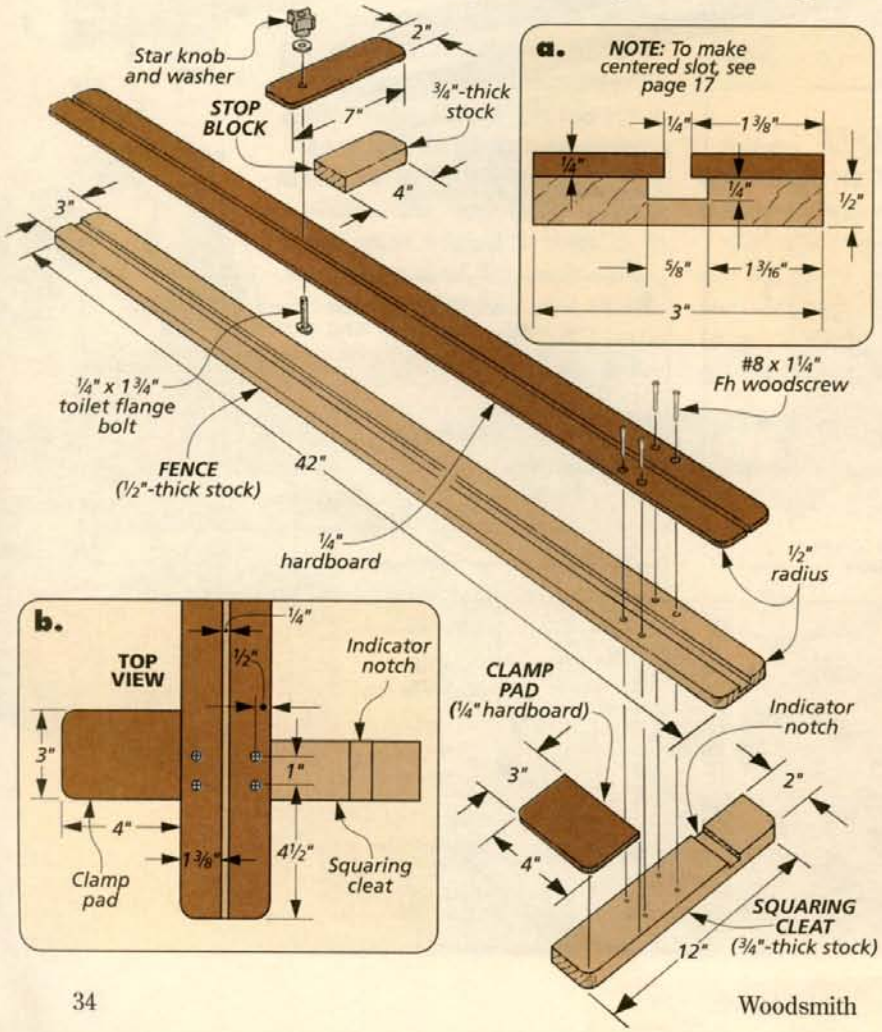

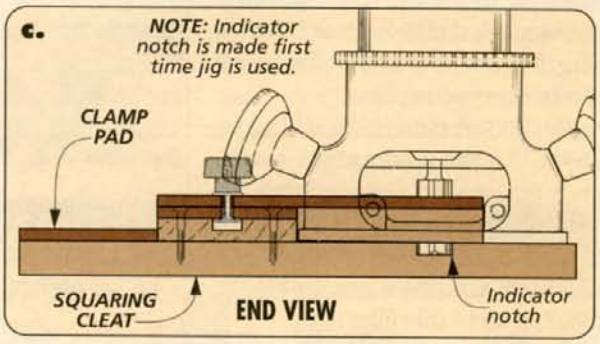

FEATURE YOUR JIG

If you've designed and built an original woodworking jig and would like to see it featured on this page, send your idea to *Woodsmith,* Tips and Techniques, 2200 Grand Avenue, Des Moines, Iowa 50312.

If we publish your jig, we will send you $100, plus a full set of Woodsmith back issues with binders. Include a sketch (or photo), an explanation of how it's used. Please include your name, address, and daytime phone number.

SOURCES

HALL TABLE

The hall table on page 6 doesn't require much hardware. Besides a few screws, the only hardware you'll need is three bail pulls with mounting bolts. The ones I used are a 2" Hepplewhite style (see photo at right). Mine were ordered from *VanDyke's Restorers* (#CH-02299842, see information in the margin at right). Similar pulls can be found from several other of the mail order sources listed.

JIG. The jig needed to cut the tapers on the legs is pretty basic (page 17). The only hardware that may not be readily available is the star knobs used on the hold-downs. These knobs can be purchased from several of the sources listed in the margin.

FINISH. When it came time to apply a finish to the table, I wanted to let the natural beauty of the walnut shine through. Walnut is already very dark, so stain isn't needed. The dark color needs only a clear finish to enhance it. Two coats of a tung oil varnish provided a nice sheen and some protection for the table top.

ROLL-AROUND CART

For the roll-around cart on page 18, the only hardware you'll need is some screws and a set of casters. The ones I used were a twin wheel caster made of nylon. I chose them because they have a hood over the exposed portion of the wheels which gives them a more finished look.

If you plan on using the top of the cart for a work surface (or just don't want the kids pushing the cart around), you may want to consider a locking caster. While I used just a regular caster, the same type of caster can be purchased with a built-in brake. This allows you to lock the wheels to keep the cart in place.

You can probably find 2" casters at most home centers, but they are also available from several of the sources listed in the margin.

FINISH. I usually don't stain cherry. I'll just wipe on a top coat and then let nature take its course. The color of the wood will deepen naturally as it's exposed to light.

But if you use a different type of wood, you may want to stain it. If so, it's much easier to stain the drawer runners *before* you attach them to the case. And remember to mask off surfaces that will be receiving glue.

WALL SHELF

The wall shelf on page 30 can be built in two different styles. Each style received a different type of finish.

CRAFTSMAN-STYLE SHELF. The oak Craftsman-style shelf was stained. But I couldn't find the exact color I was after in an off-the-shelf, ready-made stain. So I came up with a custom shade by mixing one part of a walnut stain with two parts of a golden oak stain. Then for the top coat I wiped on a couple coats of a tung oil varnish.

COLONIAL SHELF. Since the Colonial shelf was to be painted, I made it out of poplar and a pine cove molding. Poplar is inexpensive, and the grain won't show through paint. After priming the project, I used a latex paint. If you'd like to stain it or use a natural finish instead, you could use pine for all the pieces.

TABLE SAW TUNE-UP

Taking the time to maintain your table saw as described on page 26 can make time spent in the shop much more enjoyable. You may already have some of the products needed for a "tune-up" in your shop. If not, they can be found at local hardware stores or home centers. But if there's an item you can't find locally, check with the mail order sources listed at right.

MAIL ORDER SOURCES

Similar project supplies and hardware may be ordered from the following companies:

Horton Brasses Inc.
800-754-9127
www.horton-brasses.com
Drawer pulls

Lee Valley
800-871-8158
www.leevalley.com
Casters, Drawer pulls, Link belt, Saw lubricants, Star knobs

Rockler Woodworking
800-279-4441
www.rockler.com
Blade cleaner, Casters, Drawer pulls, Link belt, Star knobs

VanDyke's Restorers
800-558-1234
www.vandykes.com
Drawer pulls, Saw lubricants

Woodcraft
800-225-1153
www.woodcraft.com
Blade cleaner, Casters, Drawer pulls, Link belt, Saw lubricants, Star knobs

Woodsmith Store
800-835-5084
Blade cleaner, Casters, Link belt, Saw lubricants, Star knobs

Woodworker's Supply
800-645-9292
Blade cleaner, Casters, Link belt, Saw lubricants, Star knobs

WOODSMITH PROJECT SUPPLIES

If you would like to order back issues or a hardware kit from *Woodsmith Project Supplies*, please use our Toll-Free order line, see below. It's open Monday through Friday, from 8 AM to 5 PM Central Time. Before calling, please have your VISA, MasterCard, or Discover card ready.

If you would prefer to mail in your order, please call the number below for more information concerning shipping charges as well as any applicable sales tax.

1-800-444-7527

Woodsmith *on the web*

- "Online Extras" - Plans, Patterns, & More
- Over 100 Woodworking Tips Online
- Visit Our Readers' Project Photo Gallery
- Project Plans You Can Download
- Catalog of Project Kits, Tools, Jigs, & Plans
- Forums for Woodworking, Tools, & Classifieds
- Links to Other Woodworking Sites
- Order *Woodsmith* & *ShopNotes* Back Issues

www.woodsmith.com

Online Customer Service
Click on Subscriber Services at
www.woodsmith.com

- Access your account status
- Change your mailing or email address
- Pay your bill
- Renew your subscription
- Tell us if you've missed an issue
- Find out if your payment has been received

FINAL DETAILS

Hall Table. ► *This project is packed with eye-catching details, like the tapered legs, scrollsawn corner brackets, and beaded drawers with brass pulls. Turn to page 6 for everything you need to know to build this beauty in your shop.*

Roll-Around Cart. *With hardwood runners and a unique drawer guide system, this handy cart really puts drawers in a different light. Check out our step-by-step plans on page 18.* ▼

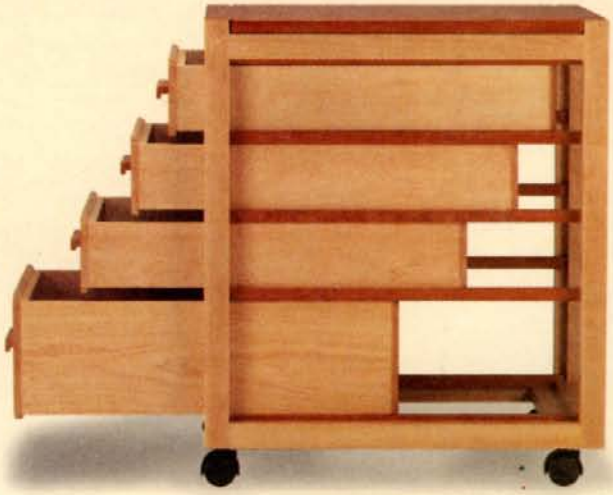

▲ **Bracket Wall Shelf**. *This shelf is easy to build, easy to hang on the wall, and easy to customize. Step-by-step instructions for this Craftsman-style shelf (and a painted Colonial version) begin on page 30.*